Wiring diagram

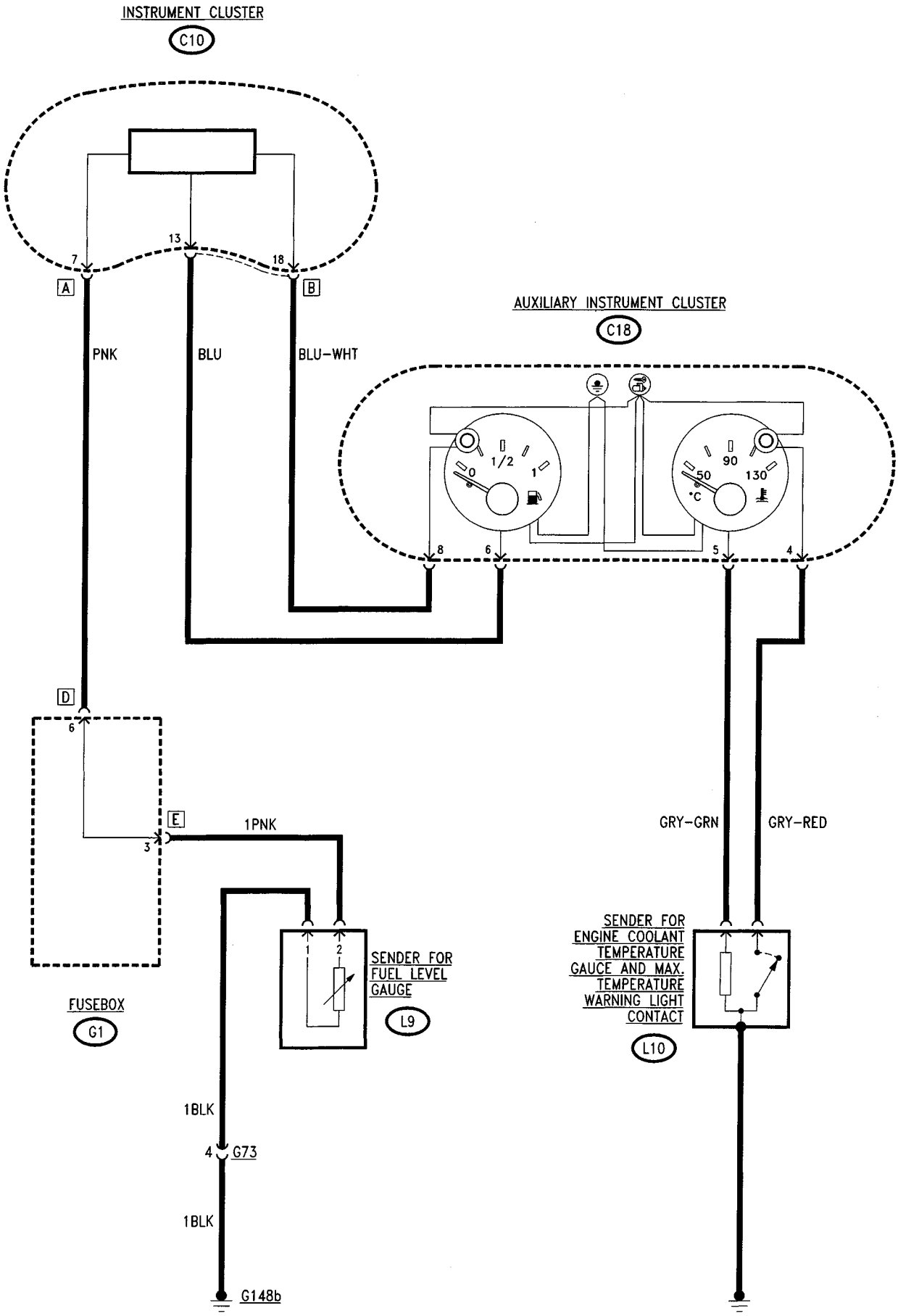

LOCATION OF COMPONENTS

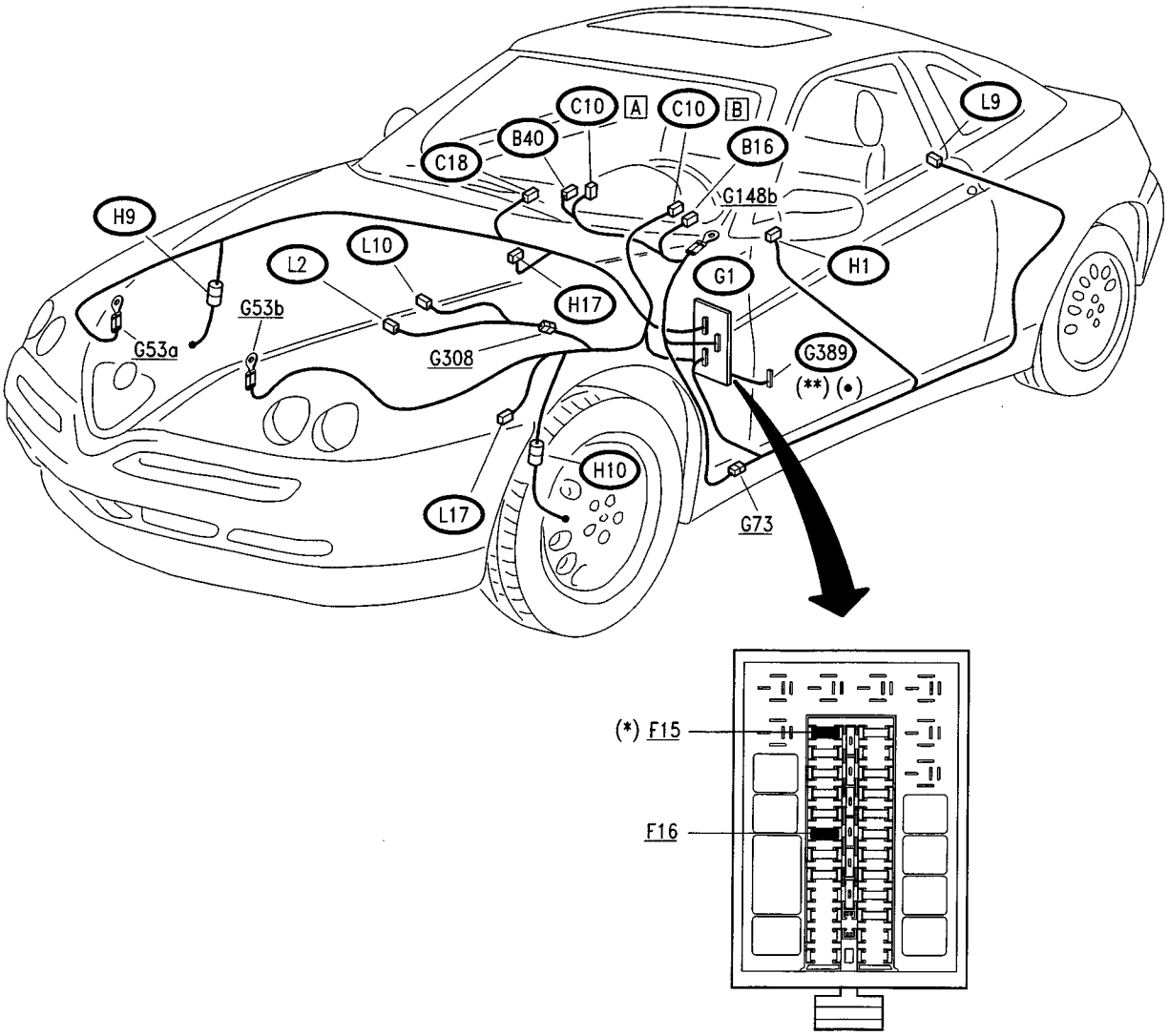

(*) up to chassis no.____
(**) from chassis no.____
(•) Red fuseholder

FAULT-FINDING TABLE

NOTE: The faults described below ("warning light not working") give a summary of all the cases in which the warning light is not operating correctly: e.g. the warning light turns on to indicate a failure and this failure does not exist, or vice-versa, a function has been switched on and the warning light fails to show it, etc...
The faults of warning lights not described here are to be found in the section concerning the system to which they refer: eg. for the high-beam warning light, see the section "Low and high-beam headlamps"

Fault	Component to be checked													
	F15 G389	F16	C10 (1)	C18 (2)	B16	B40	L17	L2	L10	L9	H17	H1	H9	H10
All lights on instrument panel are out	•	•	•											
Auxiliary panel off (not working)	•	•		•										
Main cluster fails to light up			•		•									
Auxiliary panel fails to light up			•	•	•									
Speedometer			•				•							
Rev counter			•											
Trip meter reset			•			•								
Clock		•		•										
Water t. gauge				•					•					
Fuel gauge and reserve warning light			•	•						•				
Handbrake & low brake fluid level warning light			•								•	•		
Brake pad wear warning light			•										•	•
Seat belts warning light(*)			•											
Min. oil pressure warning light			•					•						
Max. water t. warning light				•					•					

N.B. The seat belts warning light is NOT connected to the seat belt buckle: it does not turn on to indicate that the belt has not been fastened, but is turned on by a command from the electronic device of C10 for six seconds when the engine is started under all circumstances (seat belt fastened or not, engine running or not), and then goes off.

N.B.: Both the main cluster and the auxiliary cluster are made as a single component: all the connections inside are made on a printed circuit which connects the contacts of the instruments and of the various warning lights. **Repair operations are therefore not possible, not even changing bulbs, with the exception of the following:**

(1) Main instrument cluster: (C10)

Replaceable:

– cluster lighting bulbs (**A**);

– high beam warning lights (**B**).

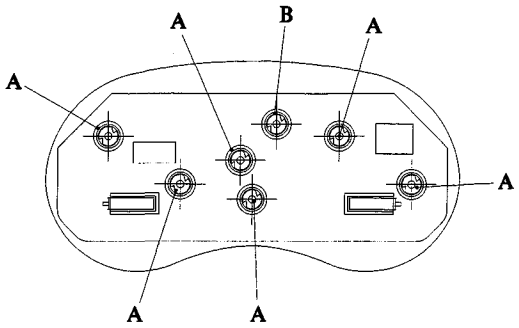

(2) Auxiliary instrument cluster: (C18)

Replaceable:

– cluster lighting bulb (**A**);

– max. coolant temperature warning light (**B**).

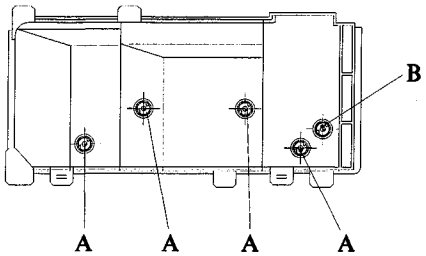

CHECKING COMPONENTS

Speedometer sensor (L17)

3.0 V6

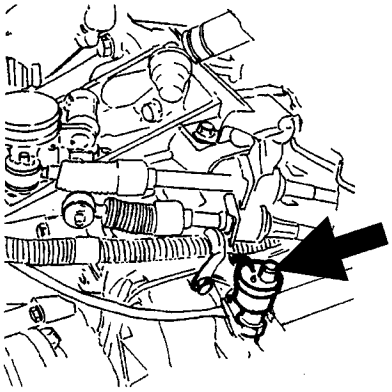

2.0 T.S. 16v

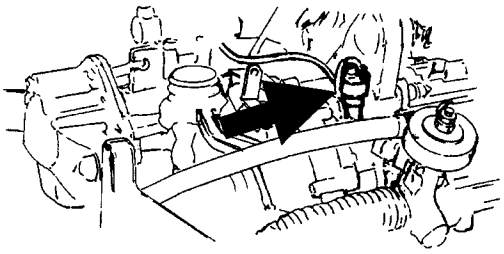

Wiring diagram:

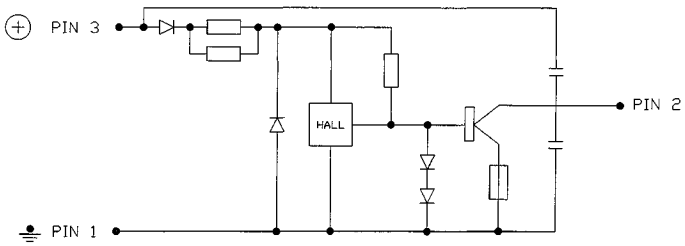

Output signal trend (with car on the move): voltage at pin 2: 16 pulses per turn

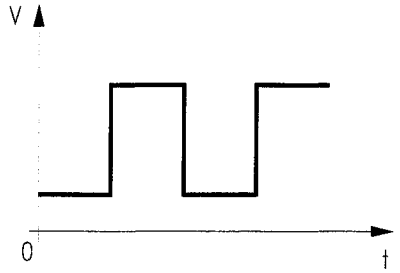

Sender for engine coolant temperature gauge and warning light contact max. temperature (L10)

3.0 V6

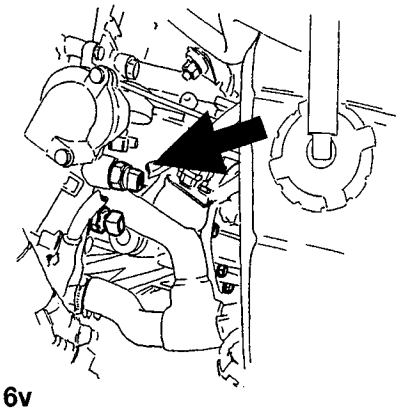

2.0 T.S. 16v

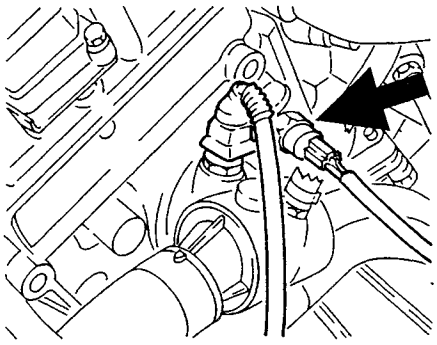

SPECIFICATIONS		
Sender		
Temperature °C	Resistance Ω	Type of fluid for check
60	525 ÷ 605	Water
90	195 ÷ 245	Water
120	82 ÷ 94	Glicerine
Contact		
	3.0 V6	**2.0 T.S. 16v**
Contact closes	115 ± 3°C	122 ± 2°C
Contact opens	≥ 102°C	112 ± 3°C

Fuel level sender (L9)

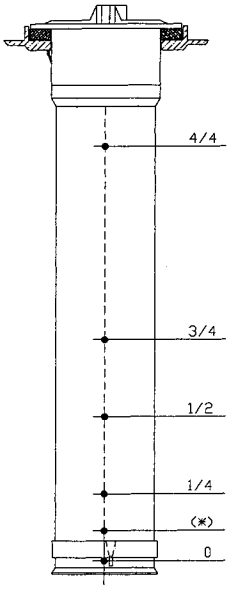

SPECIFICATIONS	
Level (see figure)	Resistance (Ω)
4/4	0 ÷ 6
3/4	59 ÷ 69
1/2	116 ÷ 126
1/4	186 ÷ 201
start of reserve (*)	262
0	295 ÷ 315

(*) 8.5 ÷ 10.5 litres

Min. engine oil pressure contact (L2)

3.0 V6

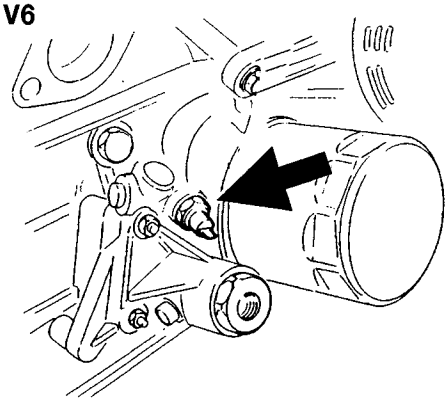

2.0 T.S. 16v

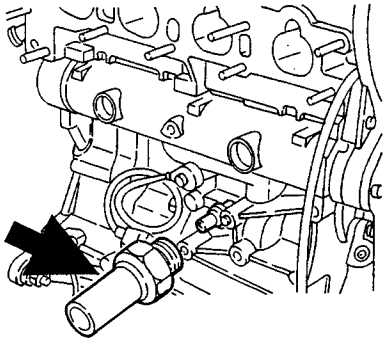

SPECIFICATIONS		
	3.0 V6	**2.0 T.S. 16v**
Conntact closes (pressure falliing)	0.15÷0.35 bar	0.2÷0.5 bar
Contact opens (pressure rising)	0.15÷0.35 bar	0.2÷0.5 bar

Min. brake fluid level switch (H17)

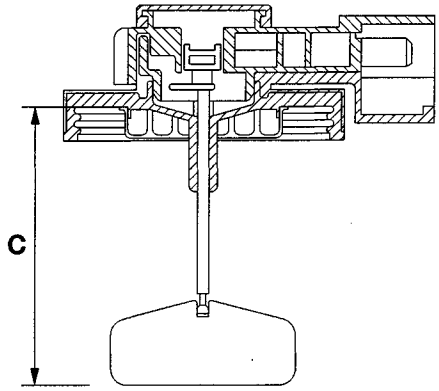

SPECIFICATIONS
The float closes the contact if dimension **C** (see figure) exceeds 40 ± 1 mm.

NOTE: to check operation of the switch simply press lightly on the upper end of the cover: this way the contact closes and it is possible to check whether the warning light is working properly

CAR RADIO

INDEX

WIRING DIAGRAM

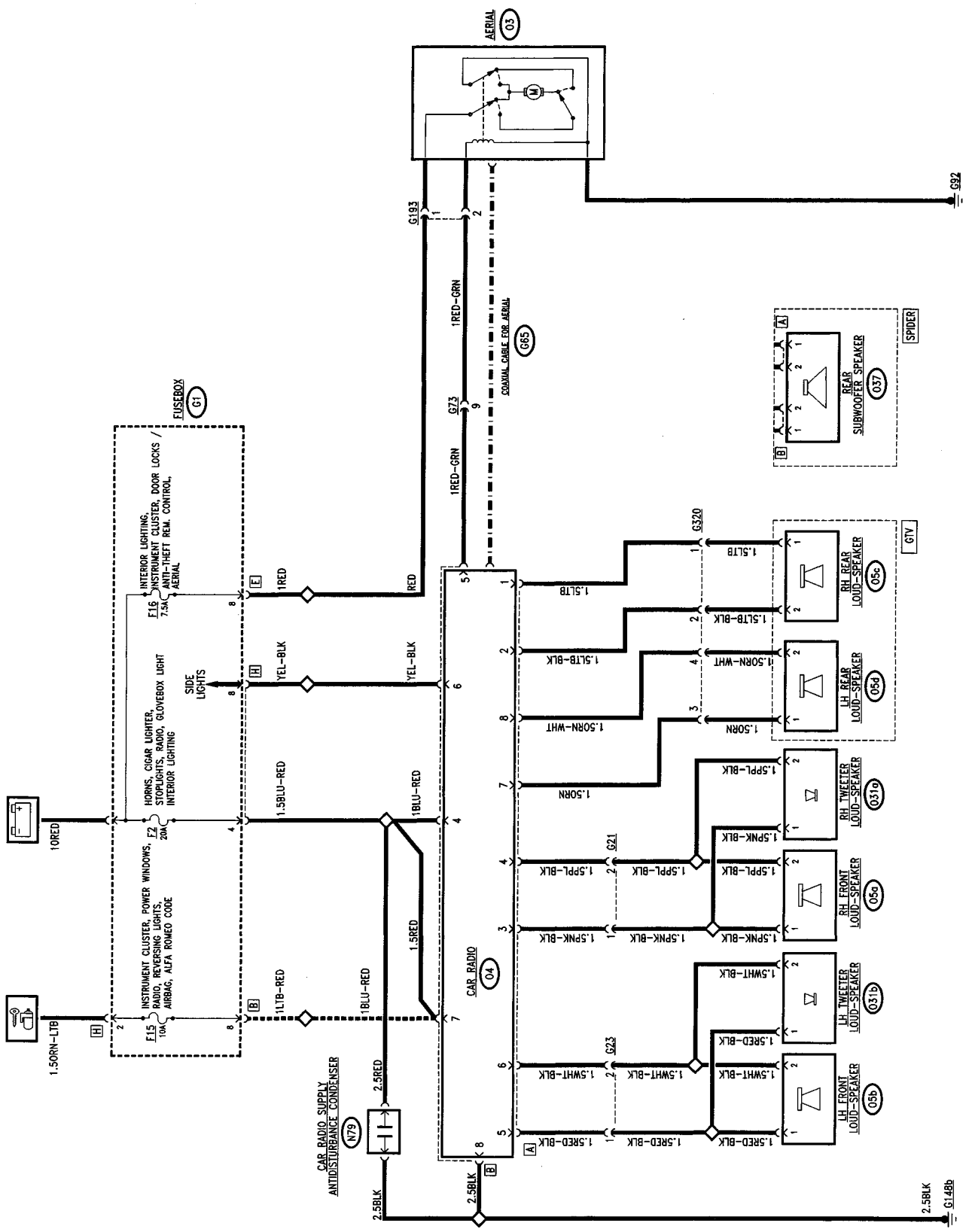

(*) up to chassis no.____

GENERAL DESCRIPTION

The car is fitted with a provision for the installation of **a car radio system complete with loud speakers.**

The system includes all the **wirings** necessary, already connected to the "base" wiring loom of the car, with **two** 130x180mm **front loudspeakers with 2 separate tweeters**, and **two** 165 mm, two-way **rear loudspeakers** (GTV) or a single 165 mm **rear subwoofer loudspeaker** (SPIDER).
The front speakers are located at the sides in the lower sections of the doors, with the tweeters on the pillar and the rear ones are on the shelf behind the seat (GTV) or in the centre behind the console (SPIDER).

The **electric aerial** is extended by a motor operated when the radio is switched on; it is located on the lefthand side of the boot lid and is connected with the radio by a coaxial cable.

The pre-installed supply for the radio is both key-operated and direct from the battery; this also makes it possible to memorise tuning, safety codes, etc. in the radio set.

In order to ensure very high sound quality under all conditions of use, a number of **anti-disturbance suppressors** have been fitted: this enables "electronic silencing" of the electric services that might interfere on the radio circuit:

- a suppressor in the boot lock;
- an aluminium sheet on the bonnet sound-deadening, earthed with a suitable braid;
- two condensers on the radio power supply.

As an optional extra the car can also fitted with a **fixed radio :** this system is composed of a **CLARION** radio with RDS coding, cassette player and CD loading control.

The radio has a removable front panel, as protection against theft and an internal antitheft code for further security.

FUNCTIONAL DESCRIPTION

The radio **O4** is supplied directly by the battery voltage via fuse **F2** of fusebox **G1**, at pin 4 of connector B (supply for memorising, etc.), while pin 7 receives the key-operated supply from fuse **F15** of **G1** (operation of the set - only up to chassis no.___ -).
Pin 8 of connector B is earthed.
Pin 6 receives the "sidelights on" signal used for lighting the radio controls.
The cables with the signals to the speakers leave from connector A of **O4.**
The aerial **A3** is connected to the radio by the special screened coaxial cable **G65**.
A signal also leaves pin 5 of connector B of **O4** which operates the motor of the electric aerial and extends it completely; when the radio signal ceases, the motor is operated in the reverse direction and the aerial is retracted completely.
The aerial **A3** is powered via the line of fuse **F16** of **G1**.
The suppressor **N79** is inserted on the radio supply.
Other suppressors are to be found near the services that would be more likely to interfere on the radio circuit.

CLARION RADIO

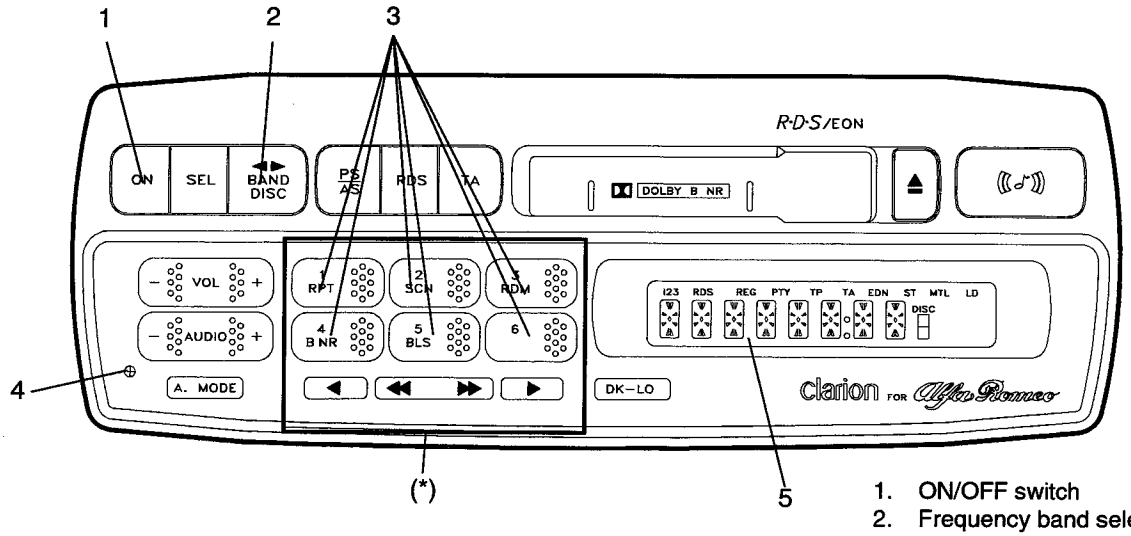

1. ON/OFF switch
2. Frequency band selector
3. Pre-select buttons
4. Antitheft led
5. Display

(*) Removable control panel

Antitheft system

The radio is fitted with a removable control panel (*) which must be removed when leaving the car to make the system unusable: removing the panel, the supply to the whole radio system is cut off and restored automatically when the panel is put back on again.

For further protection the set has a built-in anti-theft system with a secret code.

This system makes the set inoperative if for some reason it has been cut off: for example also if the battery is disconnected.

To make the radio work again it is necessary to enter the secret code given on the Customer Card, as follows:

- press the ON/OFF switch (1): the display wiii show the prompt "CODE IN";
- enter the secret code using the pre-select buttons (3); the number entered will be shown on the display;
- if the **number is correct** the radio turns on (the display will show the radio frequency);
- if the **number is wrong** the number itself stays on the display; press the BAND button (2) for at least 3 seconds and repeat the operation.

N.B. After three incorrect entries the radio will remain blocked for one hour; after a subsequent attempt it will be necessary to wait another hour and so on).

The antitheft indicator (4) signals the presence of this system when the car is not running.

OPERATION OF THE RADIO:

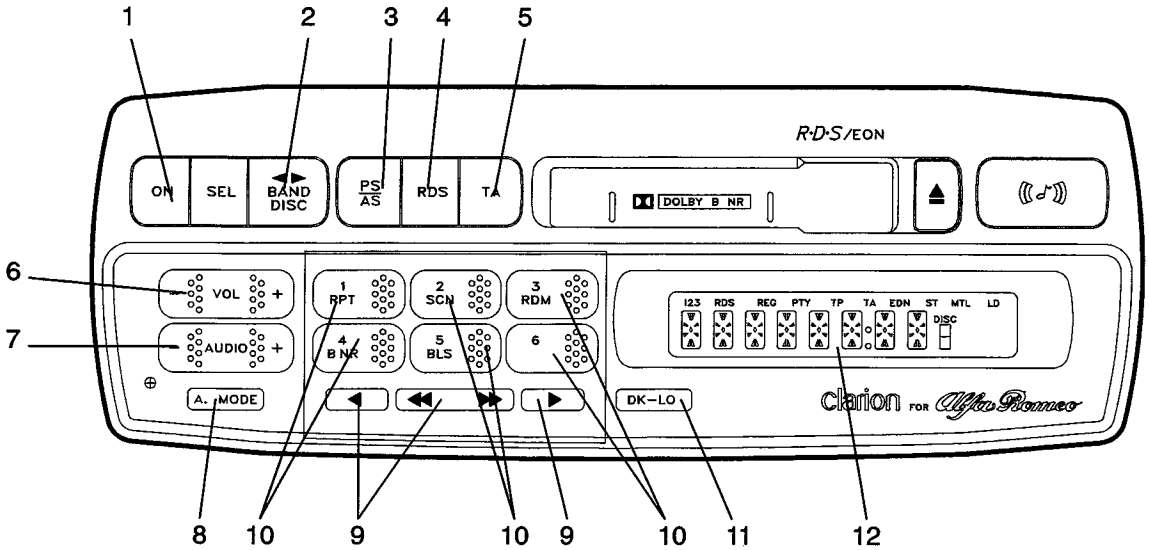

1. ON/OFF switch
2. Band selector
3. Preselector button, scan/automatic memorising off
4. RDS button
5. TA button (Traffic Announcements)
6. Volume adjustment buttons
7. Sound adjustment buttons
8. Sound mode selector switch
9. Tuner buttons
10. Pre-selector buttons
11. DX-LO tuner button
12. Display

MAGNETIC TAPE PLAYER OPERATION:

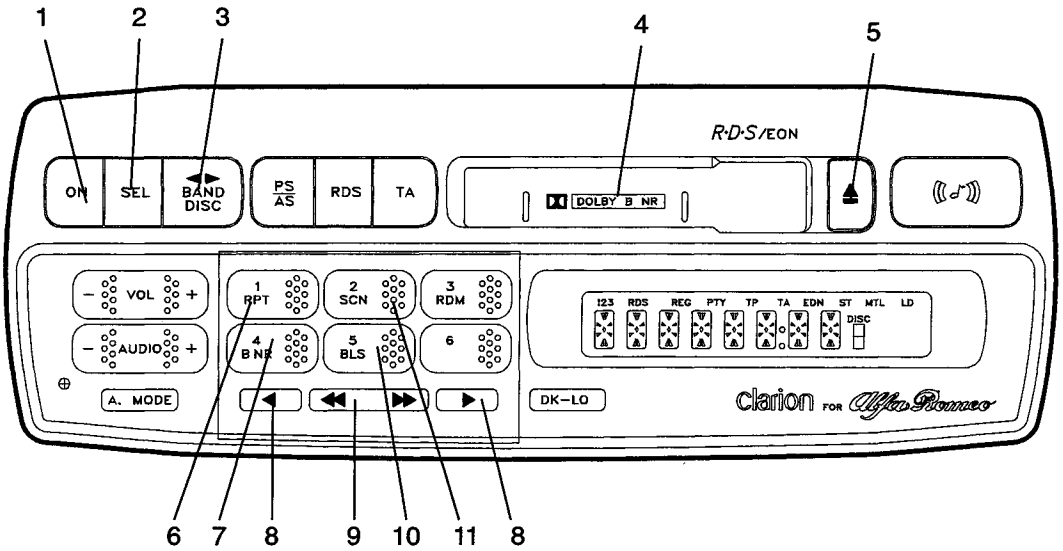

1. ON/OFF switch
2. Mode selector switch
3. Player switch
4. Cassette lid
5. Eject button
6. Repeat switch
7. Dolby switch
8. Fast forward buttons
9. APC buttons
10. Empty tape skip button
11. Tape scan switch

CD CHANGE OPERATION:

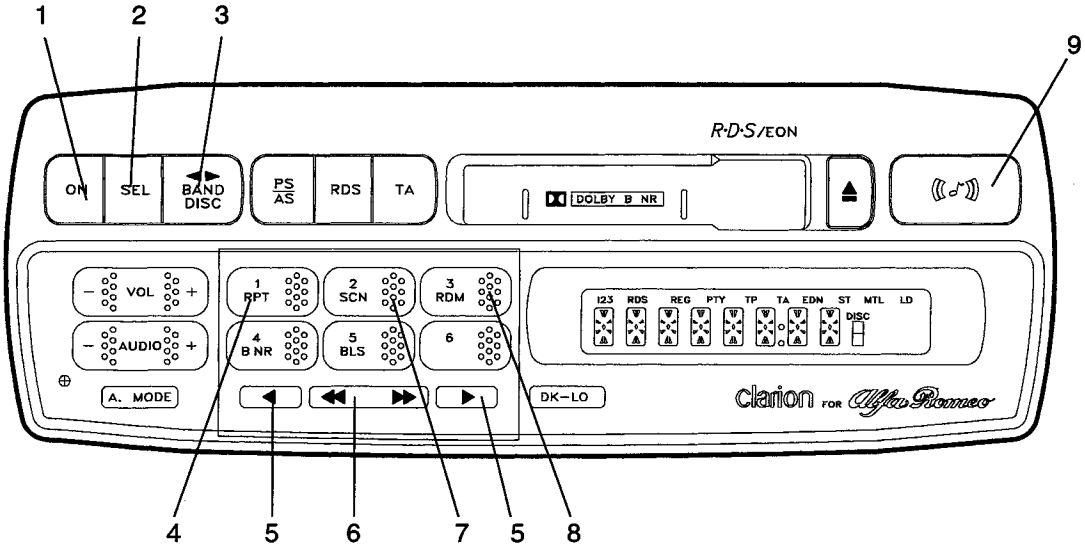

1. ON/OFF switch
2. CD mode selector switch
3. CD selector
4. Repeat switch
5. Fast rewind buttons
6. Track selector buttons
7. Scan switch
8. Random switch
9. Sound timbre switch

WARNING!
The CD CHANGE system contains a laser system and is classified as a "CLASS 1 LASER PRODUCT". For correct use of the set, the Owner's Manual should be read carefully. Do not open the casing to avoid direct exposure to laser beams.
THE USE OF CONTROLS OR ADJUSTMENTS OR THE APPLICATION OF PROCEDURES OTHER THAN THOSE SPECIFIED IN THE OWNER'S MANUAL MAY RESULT IN EXPOSURE TO HARMFUL RADIATIONS.

LOCATION OF COMPONENTS

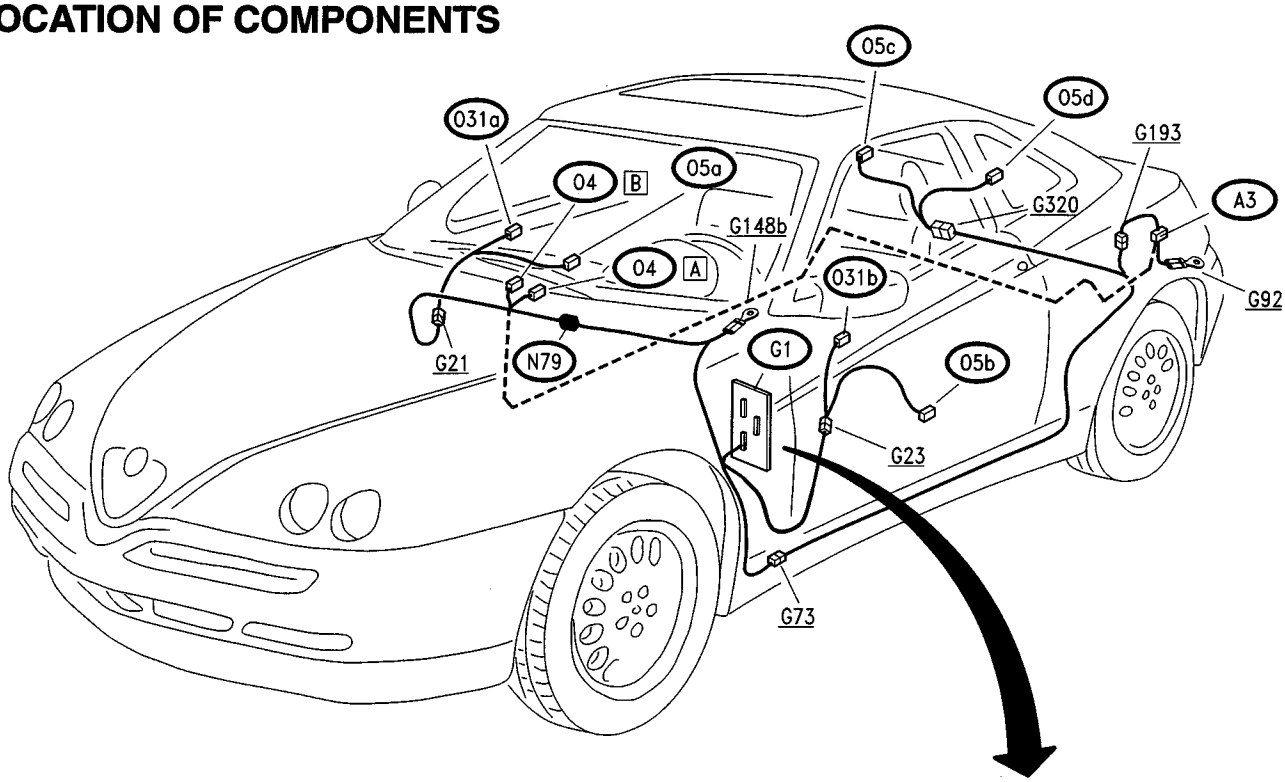

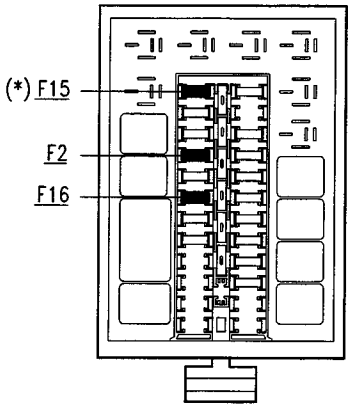

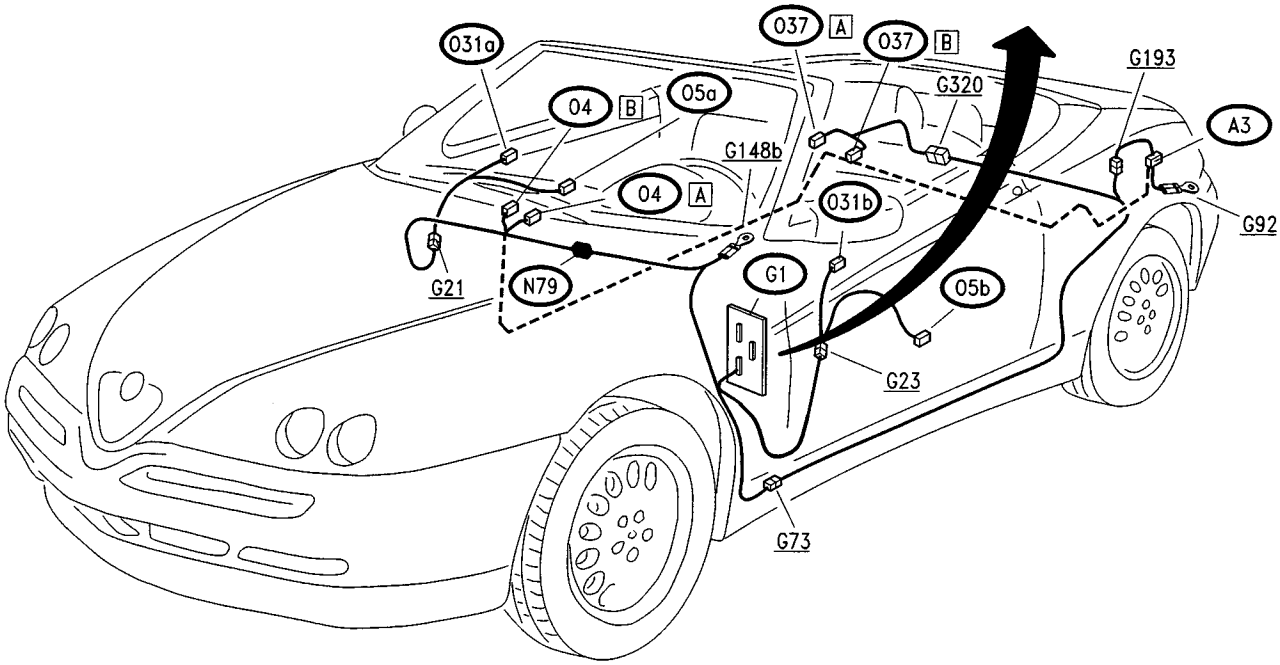

– – – – coaxial aerial cable

(*) only up to chassis no.____

FAULTFINDING TABLE

Fault	Component to be checked										
	F16	F2	F15 (*)	O4	O5a-O31a	O5b-O31b	O5c	O5d	O37	G65	A3
Radio power failure (1)		•	•	•							
Poor reception				•						•	•
Aerial sticks in	•			•							•
Front speaker/RH tweeter not working				•	•						
Front speaker/LH tweeter not working				•		•					
RH rear speaker not working (GTV)				•			•				
LH rear speaker not working (GTV)				•				•			
Rear speaker not working (SPIDER)				•					•		
Interference from other electric services (•)				•						•	

(*) up to chassis no.___

(•) If the system hisses or other signals indicating interferences, check that the connection to the wiring loom is correct and that the suppressor condensers **N79** locate near the radio and **N53** near the boot lock are working properly; also check that the sound deadening on the bonnet is fastened correctly.

CHECKING COMPONENTS

CAR RADIO (O4)

Further details on the features and operation of the radio are given in the "INSTRUCTIONS FOR USE" provided with it.

Also in the event of malfunctions of certain specific functions of the radio, consult the "INSTRUCTIONS FOR USE". Additionally:

- Also check that the additional fuse (10A) on the back of the radio is intact (pos. 5 of illustration); change it if necessary.
- In the event of hissing noises or other signs of malfunctioning of the system due to interferences, check that the anti-disturbance condensers **N79** near the radio, and **N53** in the boot lock are correctly connected and working properly.

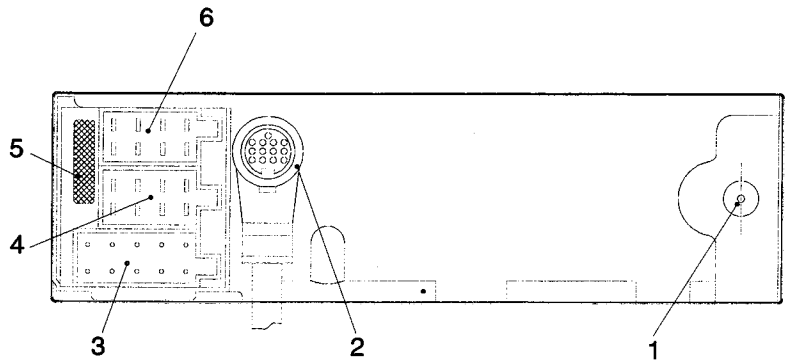

rear view of connectors side:

1 - aerial coaxial cable connection socket **G65**
2 - connector for connecting C.D. player
3 - unconnected connector
4 - connector (O4) [A]
5 - additional fuse (10A)
6 - connector (O4) [B]

Coaxial aerial cable (G65)

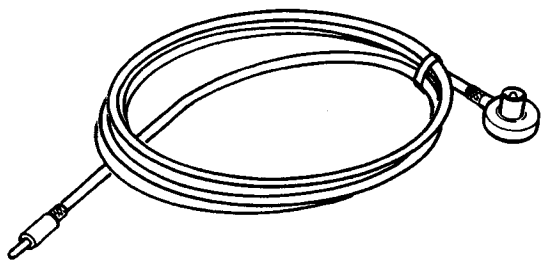

SPECIFICATIONS	
Characteristic impedance	150 Ω ÷ 10%
Resistance of internal wire	≤ 1 Ω/m
Total capacity (measured on the plug-radio side)	50 ÷ 90 pF

DOOR LOCKING SYSTEM

INDEX

WIRING DIAGRAM

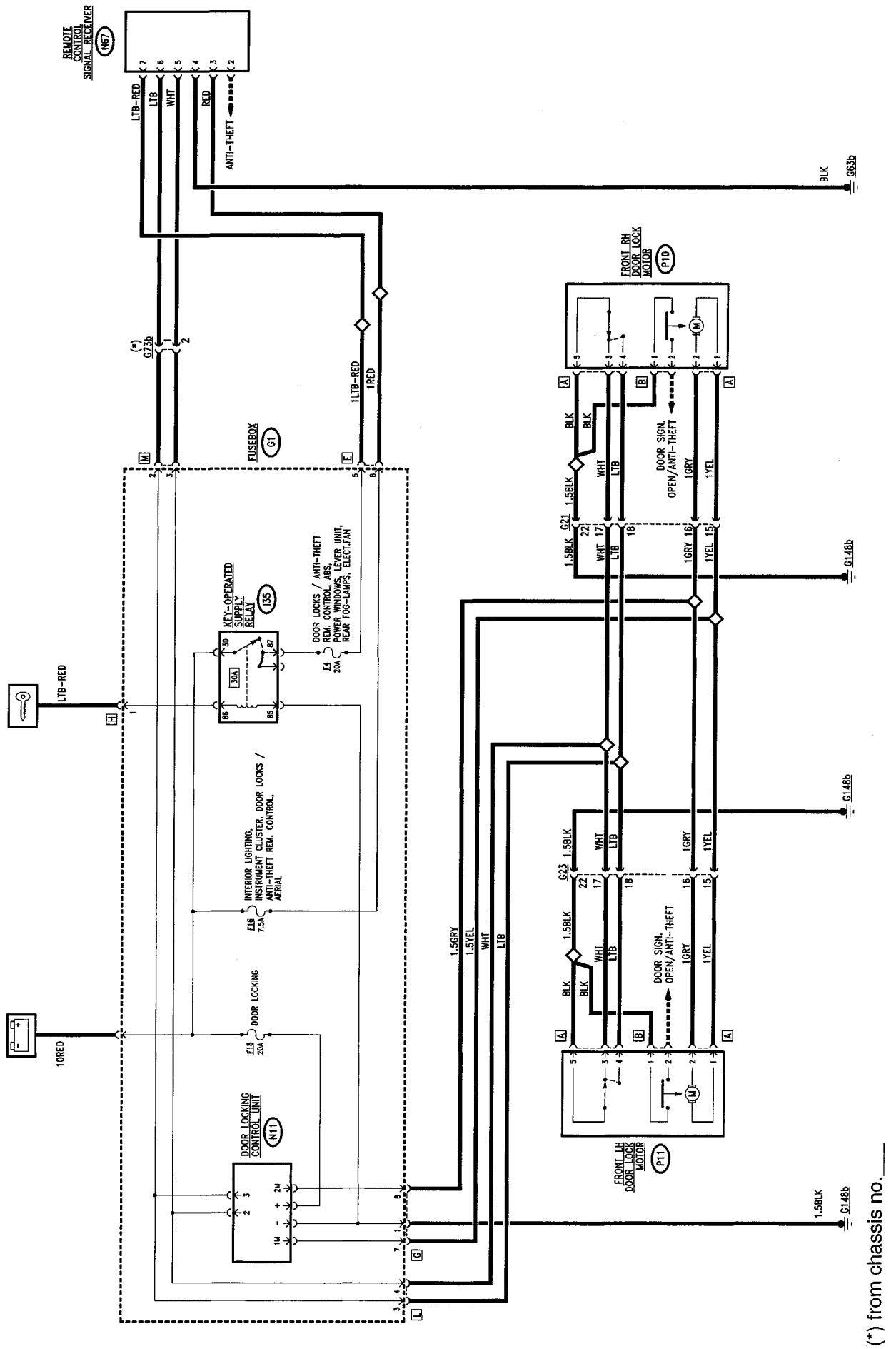

(*) from chassis no.____

GENERAL DESCRIPTION

The door locking system comprises an electronic control unit which controls and commands the door locks; each lock comprises a gear motor for locking/releasing the door lock, a control switch and a switch signalling that the doors is open.

The latter is used by the Instrument cluster (see "Instrument cluster") and by the alarm system (see "Alarm system").
The gear motors are both operated simultaneously by acting on one of the control switches either from inside through the knobs or from the outside using the key.

NOTE: the control unit logic comprises a series of check and security operations:

- if the power supply is cut off, the locked doors are not released: the doors will only open when the supply has been restored;
- during locking, if one of the control switches is mechanically impeded, this function is cut off;
- if a failure causes the supply to the door motors to last for over 4 seconds, this supply is cut off;
- if several opening/closing commands are received by the control unit in quick succession from the key, only the last one to be sent will be considered;
- in the event of contrary commands (e.g. one with the key and one with the inside knob) the control unit will oscillate: oscillation ends after 8 consecutive commands.

N.B.: In the **versions with alarm system** the door locking device is also operated via the remote control which works in the same way as manual locking/releasing. For further details see "Alarm system".

FUNCTIONAL DESCRIPTION

The door lock control unit **N11** is located in fusebox **G1.** It is supplied by the battery voltage (pin +) through fuse **F18**, while it is connected to earth (pin -).

It receives an earth signal at pins 2 and 3 which represents the locking or release command leading from the control switches of the right front lock **P10** and the left one **P11**:

- **locking signal**: if the earth passes from pin 2 to pin 3;
- **releasing signal**: viceversa from pin 3 to pin 2.

The logic of the control unit **N11** carries out the checks mentioned previously and sends the locking signal (pin 2M: 12V and pin 1M: earth) or releasing signal (pin 1M: 12V and pin 2M: earth) simultaneously to the door lock gear motors **P10** and **P11**.

LOCATION OF COMPONENTS

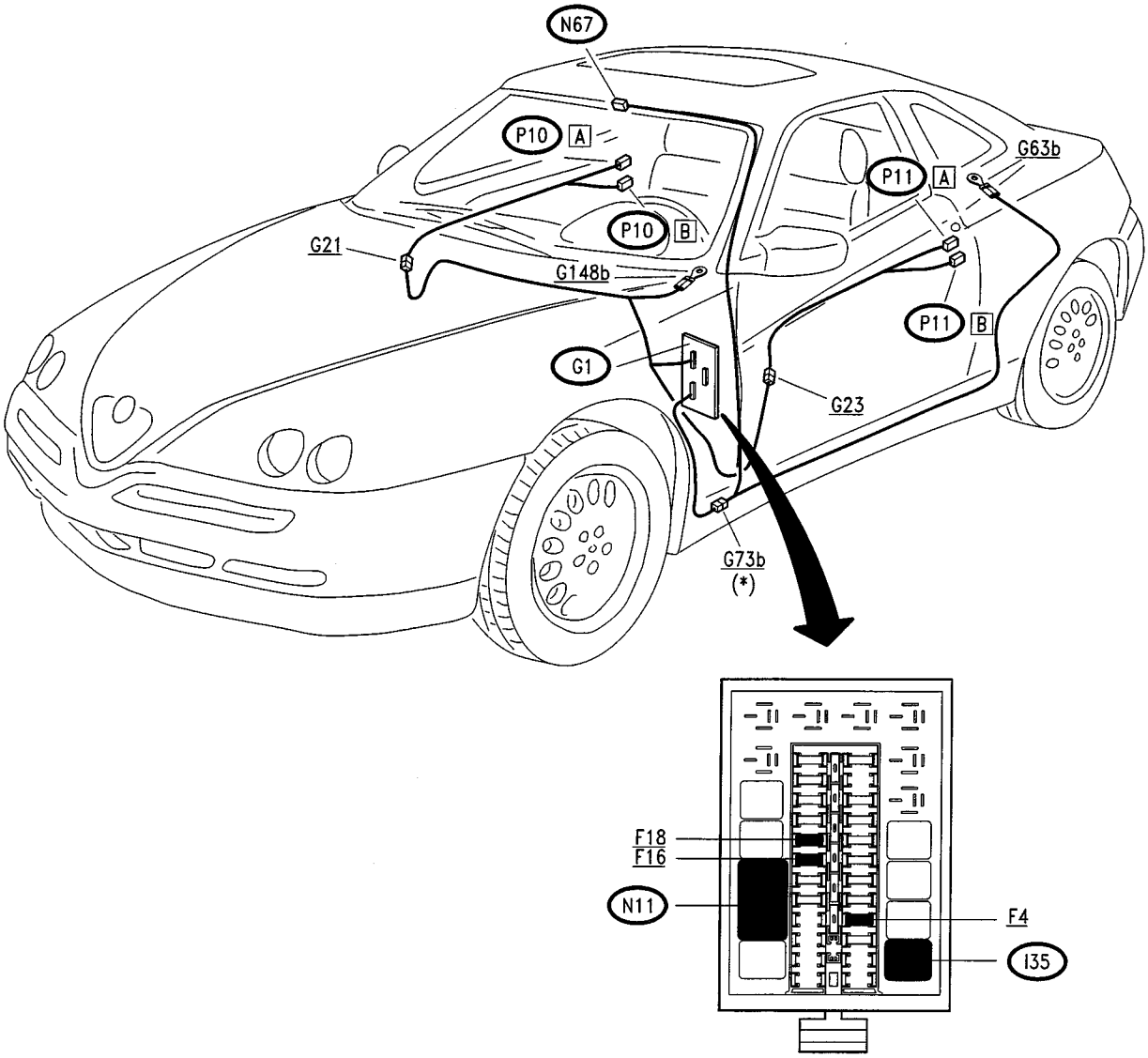

(*) from chassis no.___

FAULTFINDING TABLE

CAUTION: In the event of a mechanical failure on one of the door lock devices integrated with the lock, the control unit safety logic makes **the lock itself stay open.** In the unlikely event that the doors stay shut and locked, it is however still possible to open the lock manually: using the key from outside or raising the knob from inside.

N.B.: cutting off the supply does not "unlock" locked doors!! Locked doors will only open when the supply is received again.

Failure	Component to be checked						
	F4	F16	F18	N11	P10	P11	N67
Whole door locking system			•	•			
Door remote control not working	•	•					•
LH front door						•	
RH front door					•		

CHECKING COMPONENTS

Door locking control unit (N11)

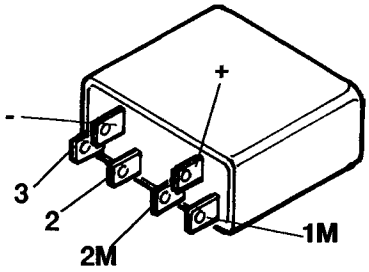

Checking the device: **TEST A**

Door lock gear motor (P10) - (P11)

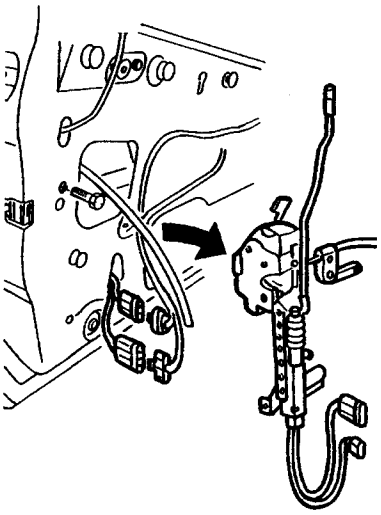

SPECIFICATIONS	
door closed	continuity between pin 1 and 2 of connector B
door open	a.c. between pin 1 and 2
lock command	cuts off continuity between pin 5 and 3 and establishes it between pin 5 and 4 of connector A
release command	cuts off continuity between pin 5 and 4 and establishes it between pin 5 and 3 of connector A
motor operation	applying 12V between pins 1 and 2 of connector A

CHECKING THE DOOR LOCK CONTROL UNIT (N11)	TEST A

TEST PROCEDURE	RESULT	CORRECTIVE ACTION
A1 CHECK VOLTAGE – Disconnect device **N11** and check on the base of fusebox **G1:** 12V between the + and - pins of **N11**	OK ▶ ~~OK~~ ▶	Carry out **step A2** Check fuse **F18** of fusebox **G1**. Check that **G1** is connected to earth: from pin 1 of connector G towards earth **G148b**
A2 CHECK LOCK/RELEASE COMMAND – Operate the door locking or release and check that an earth passes from pin 2 to pin 3 of **N11** or viceversa	OK ▶ ~~OK~~ ▶	Insert device **N11** on the base of **G1** and continue with **step A3** Restore the wiring between **N11** (**G1**) and the door lock motor (**P10** RH or **P11** LH) or change the latter
A3 CHECK LOCK/RELEASE ACTUATION – Operate the door lock or release device and check for 12V between pins 7 and 8 of connector G of fusebox **G1**	OK ▶ ~~OK~~ ▶	DEVICE **N11** IS WORKING PROPERLY: Check the door lock motor **P10** or **P11** and the corresponding connections Change device **N11**

ALARM SYSTEM (V.A.S.)

INDEX

This section documents the alarm system with INFRARED CONTROL.
For the version with RADIO FREQUENCY CONTROL, refer to the special publication "ALARM SYSTEM" PA500500000000.

GENERAL DESCRIPTION

Upon request the car is fitted with an alarm system combined with the door locking system with remote control.

The Vehicle Alarm System V.A.S. is a system which offers perimeter protection: it is able to survey the state of the doors and bonnets; the system is controlled by a single compact unit which comprises the electronic control unit and siren.

The system is "universal" as it offers the possibility to configure the control unit according to the requirements of the different countries (alarm sound level and types of light flashing for activation/deactivation.

In addition, a sophisticated self-diagnosis system controls:

- intermittent and permanent errors or faults;
- number of activations of the system and the number of alarms sounded;
- specific faults of the control unit;

COMPONENTS

The **transmitter**, protected by a shockproof rubber cover, comprises a printed circuit and an infrared ray sender; it is battery-powered (2 3V lithium batteries) and, each time the control button is pressed, it sends a beam of rays in the direction in which it is pointed. This infrared ray device continuously transmits the code for the whole time in which the button is pressed. An indicator (led) turns on each time a signal is emitted.

NOTE: the label is to be stuck in the special space provided on the CODE CARD supplied with the car.

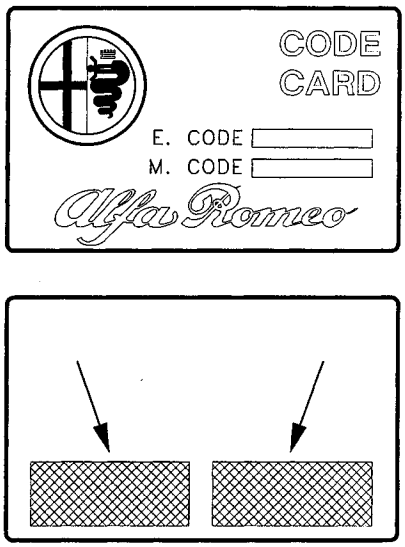

The **receiver**, incorporated in the front ceiling lamp, is an electronic device that picks up the infrared ray signal through a half-ball protruding from the receiver. There is also a led next to the receiver which lights up when the signal is received, while a special button makes it possible to memorise the secret control code (see "Programming the transmitter").
The special half round shape makes it possible to capture the signal through 360 degrees, provided that the transmitter is no more than 5 metres away.

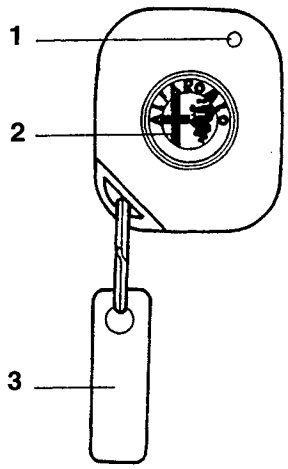

Transmitter
1 - Led
2 - Control button
3 - Transmitter code label

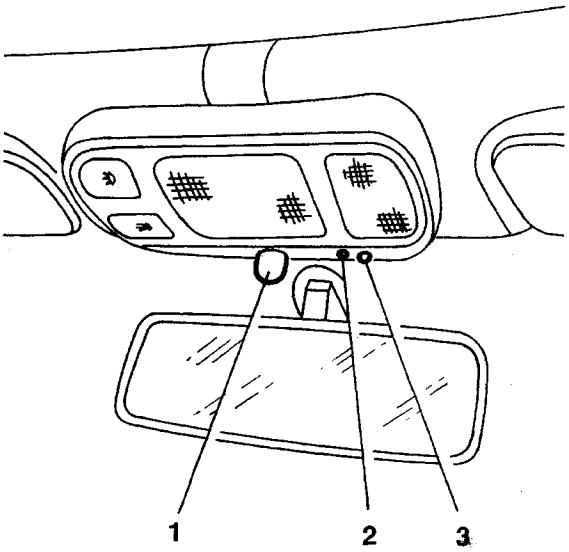

Receiver
1 - Half-ball receiver
2 - Memorising button
3 - Luminous led

The **electronic control unit** also comprises the compact **siren** : it is to be found inside the engine compartment.
The siren operates at different intensity depending on the programming for the different countries (see description below).

The lock for the emergency key for deactivating the system is located on the actual control unit, thus access to it is quick and easy.

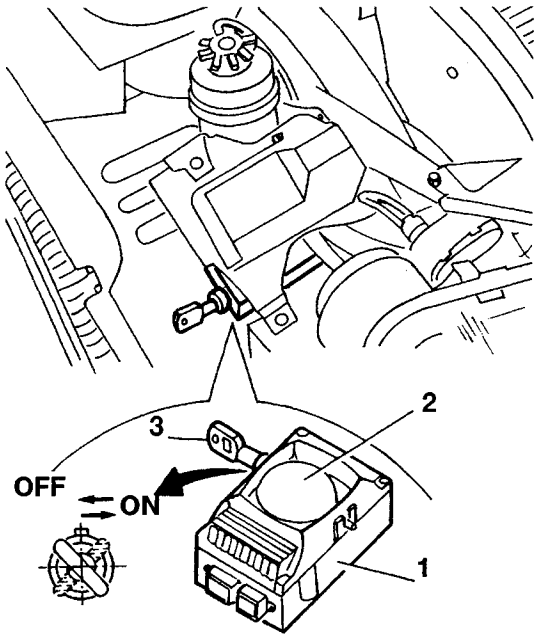

1 - Electronic control unit
2 - Siren
3 - Emergency key

For the control of the doors, bonnet and luggage compartment the same switches as for the door locking system and for the warning lights on the instrument cluster are used (see sections "Door locking system" and "Instrument cluster").

The system **signalling led** (red, of the high efficiency type), is located on the dashboard, next to the fog lamp and fog guard switches, and it signals the state of the system and any faults (see following description).

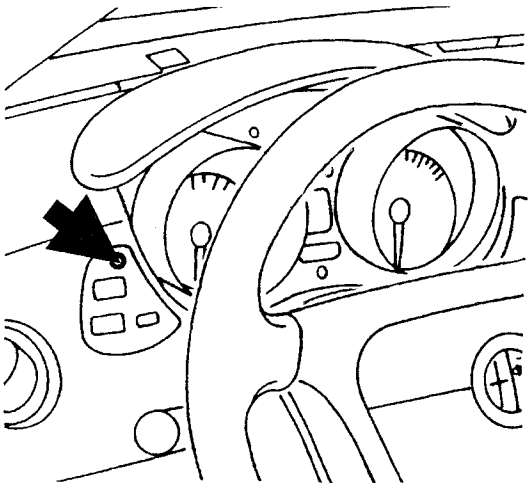

OPERATION

ENABLING/DISABLING

It is only possible to enable the alarm when the ignition key is in the STOP position.

ENABLING is possible by pressing the button on the transmitter.

DISABLING is obtained by pressing the same button once again.

To obtain the most efficient switching, press the button until a visual and acoustic signal are noted (feedback).

N.B. The system is protected against unauthorised recording of the secret code.

Enabling

Press the button whilst pointing the transmitter towards the receiver dome. Acoustic and optical signals will be noted (for the markets/versions foreseen).

Disabling

Press the button pointing the transmitter towards the receiver dome.
Also for disabling acoustic and optical signals will be noted (for the markets/versions foreseen).

COMPLETE DEACTIVATION OF THE SYSTEM

If the batteries of the transmitter are flat or the system is not working properly, the alarm system can be deactivated using the emergency key on the control unit.
When the car is delivered this emergency key must be in the "ON" position.
Turning the key to "OFF" the system is deactivated completely. In the specific version for some markets, only the batteries inside the control unit/siren are deactivated, leaving the alarm system activated as it is still supplied by the car battery.
With the key at "OFF" the surveillance of the cable cutting/battery disconnection is no longer activated.

Set this key to "OFF" and disconnect the battery cable if the vehicle is left unused for long periods (over 1 month).

"SURVEILLANCE" MODE

During the "surveillance" mode (car closed and alarm activated) the dissuasion led flashes at 0.8 Hz, in this condition, the system;

– checks the doors, bonnet and boot;

- checks that the battery positive terminal is connected and that the leads are intact;
- checks that the ignition key is not being tampered with;

ALARM MODE

The system enters the alarm mode when one of the surveillance sensors detects an abnormal situation.

The alarm mode activates the siren and hazard warning lights, for variable lengths of time depending on the versions/markets.

The alarm ceases:

- with a command from the transmitter (deactivation);
- 25 min. after the last activation of the alarm mode;
- by turning the emergency key.
  (N.B.: in this case the alarm activated condition is stored in the control unit memory).

SELF-DIAGNOSIS

UPON ACTIVATION the system carries out self-diagnosis (indicated by the flashing of the LED at 4 Hz). If a fault is found the LED will identify it through a special flashing code as shown in **table 1**.

When a door or bonnet/boot is found to be open/faulty the corresponding sensor is cut off by the surveillance mode and a beep signal is given one second after they are activated.

Type of flashing	Meaning
8 Hz, duration 2,5 sec.	Door/bonnet/boot left open or faulty switch
16 Hz, duration 2,5 sec.	Fault in electronic control unit

Table 1: Self-diagnosis

WHEN THE ALARM IS DISABLED the dissuasion LED flashes to indicate which of the sensors triggered an alarm during surveillance (see **table 2**).

N.B.: the signal is cancelled turning the ignition key to MARCIA

N. Flashes*	Component with alarm
1 Flash	Right door
2 Flashes	Left door
3 Flashes	-
4 Flashes	-
5 Flashes	-
6 Flashes	Bonnet
7 Flashes	Boot
8 Flashes	Key-operated supply cut off
9 Flashes	Battery supply cut off
10 Flashes	At least 3 causes of alarm contemporaneously

Table 2: Signals indicating alarms

(*) If there is more than one, the alarm codes are presented in sequence.

The flashes last for 0,5 sec. with an interval of 1.5 sec. between them.

In addition to the automatic SELF-DIAGNOSIS described here, it is also possible to check the system by MANUAL DIAGNOSIS (see "FAULT-FINDING).

PROGRAMMING THE TRANSMITTER

Upon leaving the factory the receiver contains a "UNIVERSAL" code which can be controlled by a "UNIVERSAL" transmitter for inspection and moving the car in the factory. On delivery it is therefore necessary to reprogramme the receiver with the transmitter code so that only the owner will have authorised use of the vehicle.

There are two possible programming modes:

– **SIMPLIFIED PROGRAMMING;**

– **PROTECTED PROGRAMMING;**

N.B. : The memorising of a transmitter must be carried out with:

– **the alarm system deactivated (by remote control): the signalling led on the dashboard must be off;**

– **the emergency key at "ON";**

– **the ignition key at STOP.**

Each transmitter has a sticker (*) with a four-figure number to protect the system from unauthorised programming (protected programming) which must be removed by the customer on delivery of the vehicle and kept in a safe place.

NOTE: this sticker can be kept on the back of the Code Card

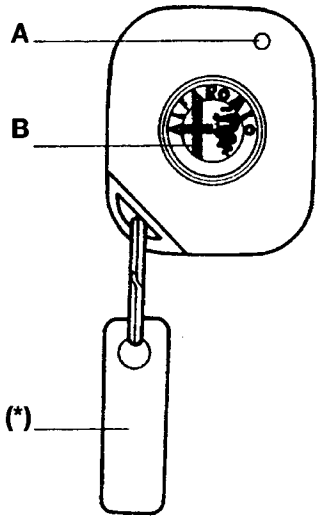

Transmitter
A - Luminous led
B - Control button
(*) - Code label

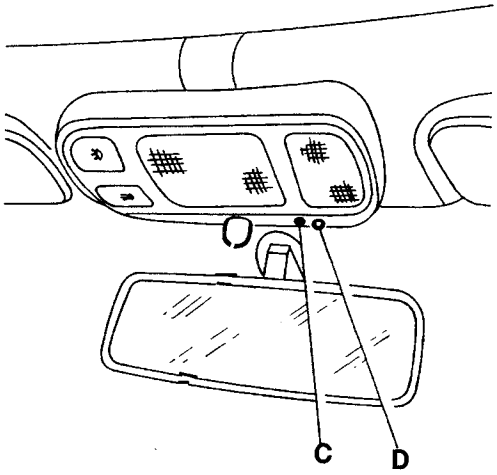

Receiver
C - Luminous led
D - memorising button

SIMPLIFIED PROGRAMMING

Simplified programming is for use when no remote controller data has previously been entered in the memory and the system needs to accept all transmitters, i.e. when the memory has not yet been "locked" by protected programming.

In this programming mode as many codes as required are recognised, but only the last four are memorised.

Proceed as follows:

1. press button **D** on the ceiling light: LED **C** flashes; **NOTE**: if the led fails to flash, check that the alarm is deactivated or that the receiver on the ceiling light is powered correctly.
2. keeping the receiver button **D** pushed, press the transmitter button **B**, point it towards the receiver, but at least 20 cm from it: the led of transmitter **A** must flash once;
3. LED **C** light continuously indicating that the code has been memorised: at this point the operator can release button **D** to end programming.

In the 3 sec. following the release of the button, it is possible to programme the country code to suit the country in which the car will be used.

This is performed by pressing in quick succession the button of the receiver **D**, as shown in **table 3**.

If the button is not pressed, the country code defaults to E.E.C.
In the event of further memory storage operations, the last one remains in the memory.

If the procedure has been carried out correctly, the LED on receiver **C** will flash 6 times, indicating that the code has been memorised on both the ceiling light receiver and in the control unit, if not, LED **C** will flash 18 times and it will be necessary to repeat the entire

procedure starting from point 1 of simplified programming, after checking that the alarm control unit and ceiling light are connected correctly.

No. of presses	Country
1	ITALY
2	GERMANY
3	FRANCE
4	SWITZERLAND
5	UNITED KINGDOM
6	HOLLAND
7	USA
8	EEC
9 / 10	Others

Table 3: Country Codes

As it is not easy to carry out this procedure in such a short time as 3 seconds, a **different procedure for entering the Country code** is recommended. To do this, proceed as follows:

- open the bonnet;
- turn the ignition key from MARCIA to STOP: within 15 seconds the bonnet button must be pressed 7 times in quick succession in less than 10 seconds; 5 beeps will indicate entry in MANUAL DIAGNOSIS (see FAULT-FINDING). During these 5 beeps press the bonnet switch once again. A last long beep will signal the acceptance of this new operation;
- keep the button pressed throughout the duration of the long beep. The latter signals entry into the country programming mode, thus the possibility to enter the country code;
- release the switch and press it within 10 seconds the number of times mentioned in table 3 to select the operating mode of the country required (each press will have a feedback beep).

N.B. To enter another remote control repeat the operations from point 1 of simplified programming, provided that the memory has not been "locked", as described below.

PROTECTED PROGRAMMING

To prevent unauthorised persons from entering their own code, it is necessary to protect ("lock") the memory; this operation takes place automatically after 256 activations/deactivations of the alarm system, or by entering the password (locking the memory manually).

Locking the memory manually

Protected programming can be entered by the Owner by entering the Password (four digit code on the transmitter label) before 256 activations/deactivations (for example on a new car during pre-delivery, when all the codes of the remote controls given to the Customer have been entered).

To enter the Password:

1. press the button on receiver **D** for appr. 2 seconds; LED **C** will flash for the whole time in which the button is pressed.
2. release button **D**: after appr. 2 seconds LED **C** will flash once indicating the possibility to enter the first digit of the password.
3. press the button of the receiver **D** the number of times corresponding to the first figure of the password (for example if the Password is 5.2.0.3. press 5 times). Each time the button is pressed LED **C** lights up briefly to confirm;
4. after appr. 2 seconds from the last press on button **D** (the fifth in the example) led **C** will flash again to ask for the next figure;
5. proceed as described above for all the other figures.
   NOTE: When the password (see example) contains a "0" there is no need to press button **D**, simply wait for the request for entry indicated by the next flash.

When the four figures of the Password have been entered, the LED on the receiver **C** can behave as follows:

- **it does not light up**: this means that the Password has been entered correctly and that it belongs to one of the codes of the remote controls memorised;
- **it stays on continuously** for several seconds meaning that the password has not been entered correctly or it does not correspond to any of the remote controls memorised. In this case, when LED **C** goes off, the correct Password should be entered again beginning from point 1.

With the correct entry of the password the memory is "locked".
From now onwards, if attempts are made to memorise a new remote control, after transmitting the new code, LED **C** on the ceiling light will stop flashing to indicate that the operation is unsuccessful.
In this case, to enter the code of the new remote control the memory has to be "re-opened" by the following procedure.

Memory opening
When the memory has been "locked" further remote control codes are entered by "manual memory opening".

The memory is opened as follows:

1. press the button on receiver **D** for appr. 2 seconds; LED **C** will flash for the whole time in which the button is pressed;
2. release button **D;** after appr. 2 seconds LED **C** will flash once indicating the possibility to enter the first digit of the password.
3. press the button of the receiver **D** the number of times corresponding to the first figure of the password (for example if the Password is 5.2.0.3. press 5 times). Each time button **D** is pressed LED **C** lights up briefly to confirm;
4. after appr. 2 seconds from the last press on button **D** (the fifth in the example) the led will flash again to ask for the next figure.
5. proceed as described above for all the four figures. It should be noted that when the password (see example) contains a "0" there is no need to press the button, simply wait for the next request.

When the Password hase been entered, the LED **C** can behave as follows:

- **it stays on continuously** meaning that the password has not been entered correctly or it is not present in the memory. Repeat the memory opening operations (with the correct password) from point 1;
- **it starts flashing**; this means that the password has been entered correctly (memory opening) and that it belongs to one of the remote control codes memorised.

At this point to memorise the code of a new transmitter proceed as described at point 1 of "Simplified programming".
When the new remote control has been entered the memory returns to the "locked" mode.

N.B.:
The alarm control unit is activated (alarm enabling/disabling) by the receiver with the code of the last transmitter memorised correctly (with the key at "ON").
In fact this code is memorised simultaneously in both the receiver and electronic control unit.
Any other transmitters memorised previously in the receiver, though they possess different codes, they use the code of the last transmitter memorised to command the control unit.
If previously the receiver and control unit were controlled regularly by a transmitter and subsquently another transmitter is memorised with the emergency key at "OFF", the code of this transmitter is memorised by the receiver, which duly controls central door locking, whereas the code of the first transmitter remains in the control unit.
Under these conditions, the system can no longer be controlled by the transmitter, which can only open/close the doors.
Simply setting the emergency key to "ON" and memorising yet another new transmitter, the problem is not solved since the system can memorise a new code only if this has been memorised with the key at "ON" and in succession after the first transmitter.
The memory must be "opened" (see previous section) with the first transmitter, in order to correctly enter the other transmitters.

WARNING:
It should be noted that each single component of the alarm system installed on the car becomes an integral part of it and must not be altered or tested on other cars, even if of the same model.
Therefore never exchange control units and/or receivers between two cars.
If a control unit is changed, the memorising procedure must be repeated "re-opening" the memory.
If a receiver (ceiling light) is changed simplified programming followed by protected programming must be carried out.

WIRING DIAGRAM

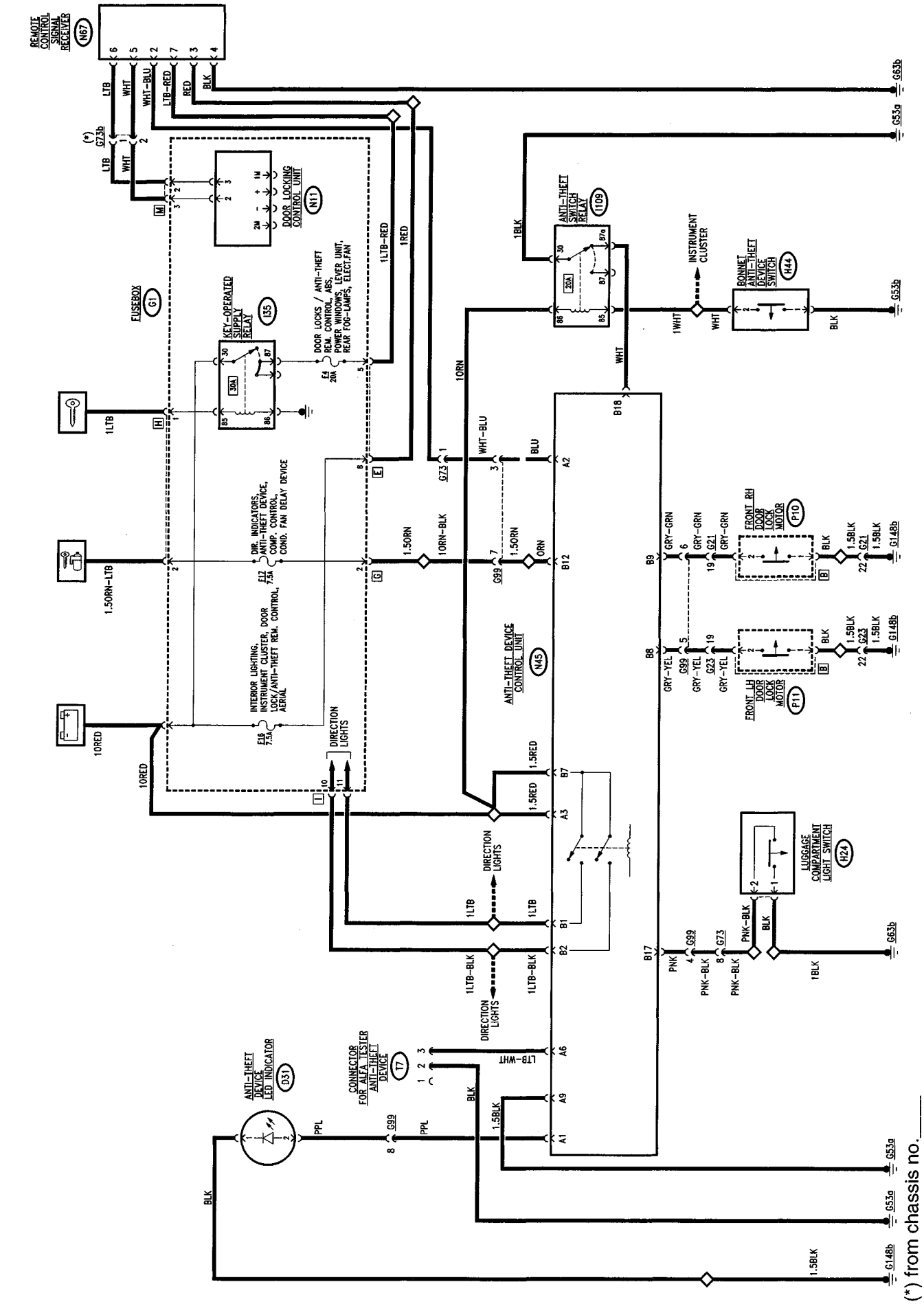

(*) from chassis no.

FUNCTIONAL DESCRIPTION

The alarm system is controlled by electronic control unit **N45** integrated with the siren and the emergency key.

The control unit is supplied directly by the battery at pin A3; the key-operated supply reaches pin B12 via fuse **F17** of the fusebox **G1,** the same line also supplies pin B7 (blinker supply).

Pin A9 is earthed (**G53a**).

The system activation signal is sent from the receiver **N67** to pin A2 of the control unit, via the **serial connection line**.

Through the receiver **N67** door opening/closing is controlled, by means of the door lock control unit **N11** of fusebox **G1** (for further details see "Door locking System").

The control unit controls the closing of doors and bonnets via switches **P11** and **P10** of the doors (which are the same for the door locking device) which sends an earth respectively to pins B8C, B9. The bonnet is controlled by switch **H44**, which is connected at pin B18, and the boot by switch **H24** (the same that turns on the luggage compartment light) which is connected at pin B17.

The signal leading from the bonnet is "inverted" through a special relay **I109.**
N.B. The signals which reach the control unit from the doors and boot are a.c. when the door is closed and earth when the door is open. Conversely, the one from the bonnet is an earth signal when the bonnet is closed and a.c. when the bonnet is open.

In addition to the locking of the doors carried out directly by the receiver **N67**, the control unit activates the blinkers (flashing of the hazard warning lights) sending an intermittent signal from pin B1 for the righthand lights and from B2 for the lefthand lights.

Pin A1 of the control unit sends a "duty-cycle" signal to led **D31** when conditions so require.

Lastly the system can be connected with the Alfa Romeo Tester through connector **T7**; the diagnosis signal - line K - leaves from pin A6 of the control unit.

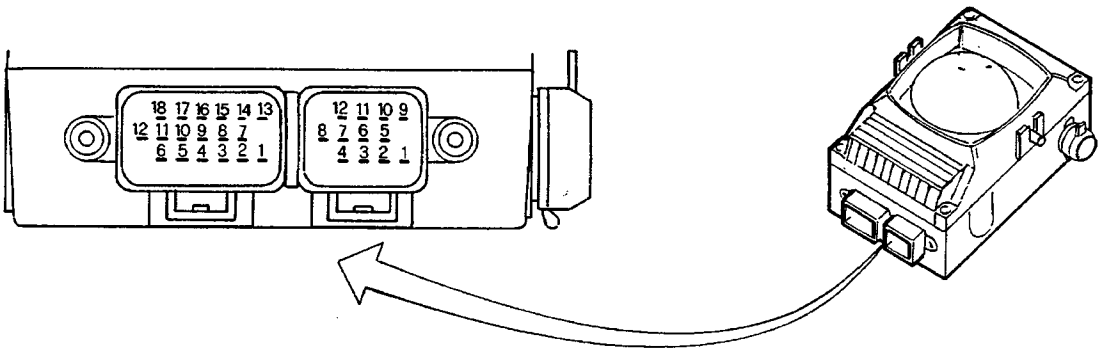

PIN-OUTS OF THE ALARM SYSTEM CONTROL UNIT

A1 Signalling led control
A2 Serial connection line with receiver (ceiling light)
A3 Direct supply
A4 N.C.
A5 N.C.
A6 Diagnosis line K
A7 N.C.
A8 N.C.
A9 Control unit earth
A10 N.C.
A11 N.C.
A12 N.C.

B1 RH direction indicators control
B2 LH direction indicators control
B3 N.C.
B4 N.C.
B5 N.C.
B6 N.C.
B7 Blinker supply
B8 LH door open signal
B9 RH door open signal
B10 N.C.
B11 N.C.
B12 "Key-operated" supply
B13 N.C.
B14 N.C.
B15 N.C.
B16 N.C.
B17 Tailgate open signal
B18 Bonnet closed signal

LOCATION OF COMPONENTS

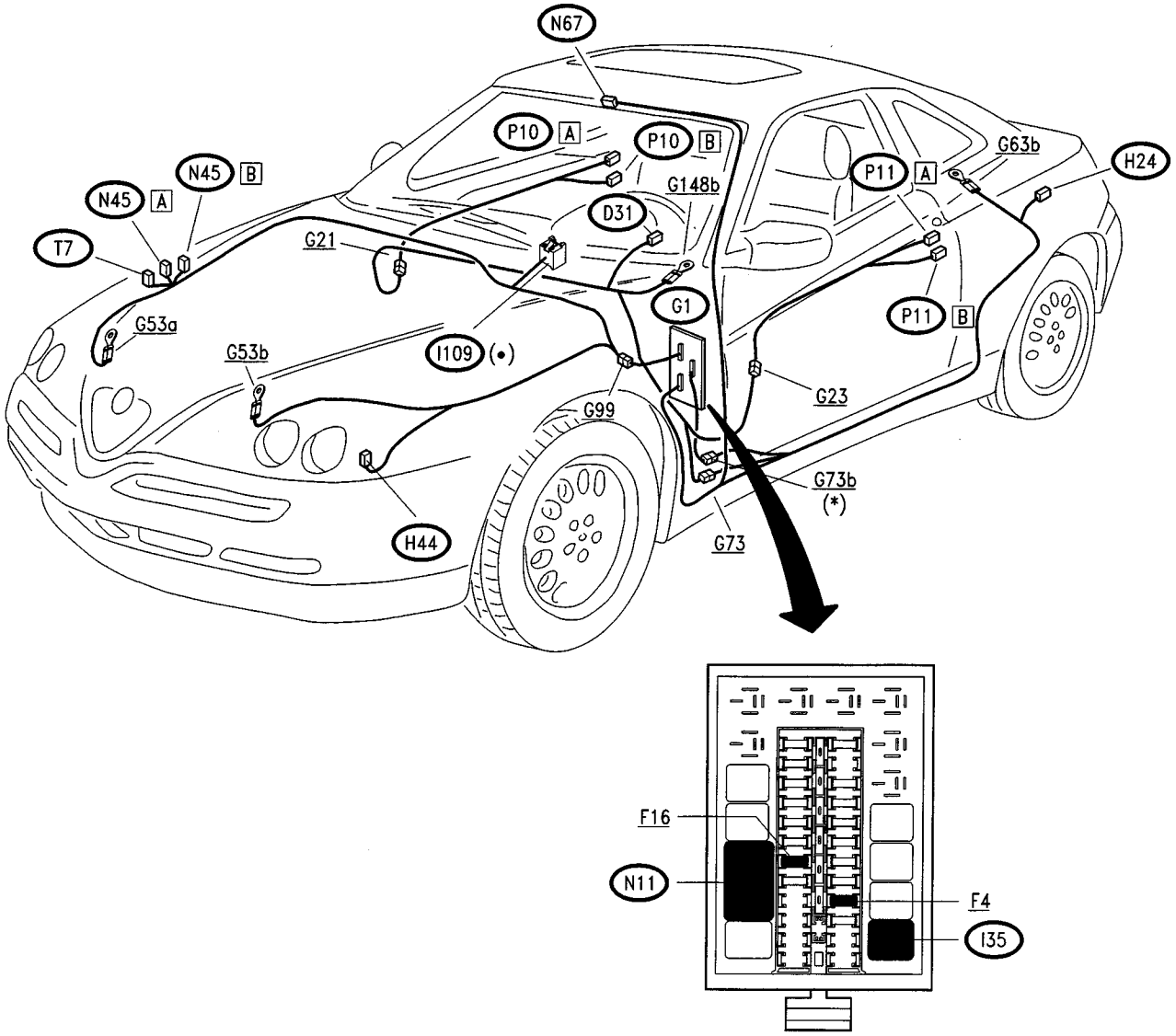

(•) Red base
(*) From chassis no.___

FAULT-FINDING

When the system is activated and deactivated it automatically carries out **SELF-DIAGNOSIS** which reveals certain possible faults by flashing the led as shown below:

ACTIVATION:

Type of led flashing	Meaning	Test procedure
8 Hz, duration 2.5 sec.	Door/bonnet/boot left open or faulty switch	Check that doors and bonnets are correctly shut. Activate and deactivate the system. Count the number of flashes of the led and proceed as described in the next table
Fixed light, duration 16 Hz, duration 2.5 sec.	Fault in the control unit electronics	Change the control unit **N45**
No flash	Fault of led	**B**

DEACTIVATION:

No. of Flashes of led	Component with alarm	Test to be carried out
1 Flash	RH front door	**C**
2 Flashes	LH front door	**D**
3 Flashes	--	(*)
4 Flashes	--	(*)
5 Flashes	--	(*)
6 Flashes	Bonnet	**E**
7 Flashes	Boot	**F**
8 Flashes	Key-operated supply cut off	**A**
9 Flashes	Battery supply cut off	**A**
10 Flashes	At least 3 causes of alarm contemporaneously	Repeat activation/deactivation of the system. If necessary

(*) function not foreseen for the version adopted here.

MANUAL DIAGNOSIS

It is possible to carry out MANUAL DIAGNOSIS, opening the bonnet and setting the ignition switch from the MARCIA position to the STOP position: within 15 seconds the bonnet pushbutton must be pressed 7 times in quick succession in less than 10 seconds; 5 beeps will signal the beginning of the manual diagnosis procedure. After 10 seconds the blinkers will flash once (500 ms).

Entering this mode, the self-diagnosis procedure of the volumetric sensors connected to the control unit is started automatically. if the test is positive, the direction indicators will flash three times and the control unit will sound 3 beeps simultaneously. After this initial phase, operate the different switches of the doors and boot; each change in the state of the switches will correspond to a brief flash of the direction indicators and a beep, accompanied by a flash of the signalling LED. When the MARCIA contact is engaged, the siren will sound briefly (500 msec.) and the blinkers will flash (2.5 sec.).

The latter will enable exit from the manual diagnosis procedure. It is also possible to exit MANUAL DIAGNOSIS by stopping all operations for 30 seconds: exit will be signalled by the turning on of the direction indicators for appr. 2.5 seconds and a beep.

FAULT FINDING USING THE ALFA ROMEO TESTER

In addition to the procedure described above, it is possible to quickly locate any faults by connecting the Alfa Romeo Tester to the control unit, using the special cartridge.

N.B.: Beforehand, carry out **TEST A**.

PRELIMINARY CONTROL UNIT CHECK (N45)	TEST A

TEST PROCEDURE	RESULT	CORRECTIVE ACTION
A1 CHECK FUSES – Check the intactness of fuses **F17, F4** and **F16** of fusebox **G1**	OK ▶ ~~OK~~ ▶	Carry out **step A2** Change fuses **F17, F4** and/or **F16**
A2 CHECK VOLTAGE – Check for 12 V at pin A3 of control unit **N45**	OK ▶ ~~OK~~ ▶	Carry out **step A3** Restore the wiring between pin A3 of **N45** and the branch fusebox **G1**
A3 CHECK VOLTAGE – With the ignition key turned, check for 12 V at pin B12 of control unit **N45**	OK ▶ ~~OK~~ ▶	Carry out **step A4** Restore the wiring between pin B12 of **N45** and the fusebox **G1**
A4 CHECK EARTH – Check that pin A9 of control unit **N45** is earthed (0 V)	OK ▶ ~~OK~~ ▶	Carry out **step A5** Restore the wiring between pin A9 of **N45** and earth **G53a**
A5 CHECK SERIAL CONNECTION – Check the continuity of the connection between pin A2 of **N45** and pin 2 of receiver **N67**	OK ▶ ~~OK~~ ▶	Carry out **step A6** Restore the wiring between **N67** and **N45**
A6 CHECK CONTINUITY – Check the continuity of the cables: - between pin A6 of **N45** and pin 3 of diagnosis connector **T7** - between pin 2 of **T7** and earth **G53a**	OK ▶ ~~OK~~ ▶	CONNECT TO THE DIAGNOSIS SOCKET **T7** AND CONTINUE OPERATIONS WITH THE ALFA TESTER, OR FOLLOW THE INSTRUCTIONS OF THE LED THAT SIGNALS THE RESULTS OF SYSTEM SELF-DIAGNOSIS Restore the wiring between **T7, N45** and **G53a**

CHECK WARNING LED (D31) — TEST B

TEST PROCEDURE	RESULT	CORRECTIVE ACTION
B1 CHECK LED – Disconnect led **D31** and check that it is working (applying for example 5 V at the terminals)	OK ▶	Carry out **step B2**
	~~OK~~ ▶	Change the led **D31**
B2 CHECK CONTINUITY – Check continuity between: - one of the terminals of led **D31** and earth **G148b** - the other terminal of led **D31** and pin A1 of control unit **N45**	OK ▶	Change the control unit **N45**
	~~OK~~ ▶	Restore the wiring between: - **D31** and earth **G148b** - **D31** and pin A1 of **N45**

CHECK RH FRONT DOOR CONTACT (P10) — TEST C

TEST PROCEDURE	RESULT	CORRECTIVE ACTION
C1 CHECK DOOR LOCKING DEVICE – Check that the door locking device is working properly, with regard to the RH front door	OK ▶	Carry out **step C2**
	~~OK~~ ▶	Follow the instructions in FAULT-FINDING in the section "DOOR LOCKING SYSTEM"
C2 CHECK EARTH – With the door open, check for 0 V (earth) at pin B9 of anti- theft control unit **N45**	OK ▶	Change the control unit **N45**
	~~OK~~ ▶	Restore the wiring between pin B9 of control unit **N45** and door lock **P10**

CHECK LH FRONT DOOR CONTACT (P11) — TEST D

TEST PROCEDURE	RESULT	CORRECTIVE ACTION
D1 CHECK DOOR LOCKING DEVICE – Check that the door locking device is working properly, with regard to the LH front door	OK ▶	Carry out **step D2**
	~~OK~~ ▶	Follow the instructions given in FAULT-FINDING of the "DOOR LOCKING DEVICE" section
D2 CHECK EARTH – With the door open, check for 0 V (earth) at pin B8 of the anti-theft control unit **N45**	OK ▶	Change the control unit **N45**
	~~OK~~ ▶	Restore the wiring between pin B8 of control unit **N45** and the door lock **P11**

CHECK BONNET CONTACT (H44) — TEST E

TEST PROCEDURE	RESULT	CORRECTIVE ACTION
E1 CHECK CONTACT – Check the correct fastening of contact **H44** and of the striker on the bonnet	OK ▶ ~~OK~~ ▶	Carry out **step E2** Fix or change contact **H44** or the corresponding striker
E2 CHECK EARTH – With the bonnet open, check for an earth on both terminals of switch **H44**	OK ▶ ~~OK~~ ▶	Carry out **step E3** Restore the wiring between **H44** and earth **G53b**
E3 CHECK EARTH – With the bonnet closed, check for 0 V (earth) at pin B18 of anti-theft control unit **N45**; opening the bonnet the signal ceases	OK ▶ ~~OK~~ ▶	Change the control unit **N45** Check relay **T109**; restore the wiring between switch **H44** and relay **T109**, and between this and pin B18 of control unit **N45**

CHECK BOOT CONTACT (H24) — TEST F

TEST PROCEDURE	RESULT	CORRECTIVE ACTION
F1 CHECK LUGGAGE COMPARTMENT LIGHT – Check that the light turns on when the boot is opened	OK ▶ ~~OK~~ ▶	Carry out **step F2** Follow the instructions given in FAULT-FINDING in the "CEILING LIGHTS" section
F2 CHECK EARTH – With the boot open, check for 0 V (earth) at pin B17 of anti-theft control unit **N45**	OK ▶ ~~OK~~ ▶	Change the control unit **N45** Restore the wiring between contact **H24** and pin B17 of control unit **N45**

LUGGAGE COMPARTMENT AND FUEL FLAP OPENING CONTROL

INDEX

WIRING DIAGRAM

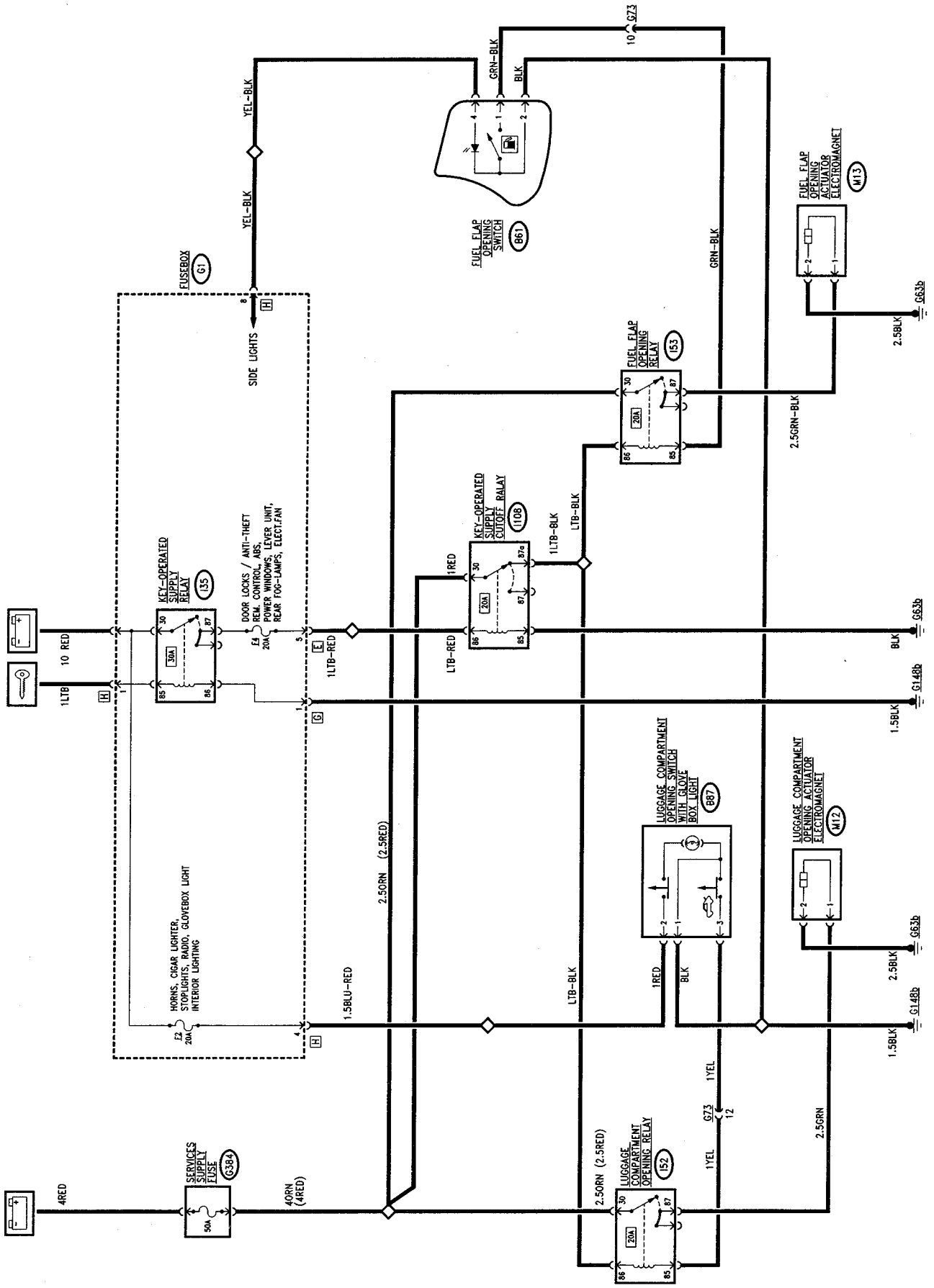

GENERAL DESCRIPTION

In addition to using the key in the rear lock, the **luggage compartment** can also be opened from inside the car through an electrical control.
The switch that opens the lock by an electromagnetic control is to be found in the glove box.
The glove box is illuminated automatically when it is opened by a light on the switch. This device only works with the ignition key at STOP, otherwise the lock must be opened manually.

The **fuel flap** is opened by an electrical control by the switch on the dashboard which operates the corresponding electromagnet.

This device too, only operates with the ignition key at STOP.

The two relays which operate the devices, the supply fuse and the "key-operated cut out" are located in the rear compartment.

FUNCTIONAL DESCRIPTION

The boot opening electromagnet **M12** is controlled by relay switch **I52**: this is supplied on the power line by battery voltage via floating fuse **G384** and on the energizing line by relay switch **I108**: this switch sends the supply to relay **I52** and to the other release devices if it does not "receive" the signal that the key is at "MARCIA"; in fact, when the key is turned it cuts off the supply; the command signal - earth signal to energize relay **I52** - leads from the special switch **B87** located in the glove box; the energized relay supplies electromagnet **M12** which triggers the boot lock.
The switch in **C16** is illuminated when the side lights are on.

NOTE: switch **B87** incorporates a pushbutton which turns on a light when the glovebox is opened; the supply line for this light leads from fuse **F2** of **G1**.

The fuel flap opening electromagnet **M13** is controlled by relay **I53** in the same way as described for the luggage compartment opening.

The control switch **B61** is to be found on the dashboard and it is illuminated when the side lights are on.

LOCATION OF COMPONENTS

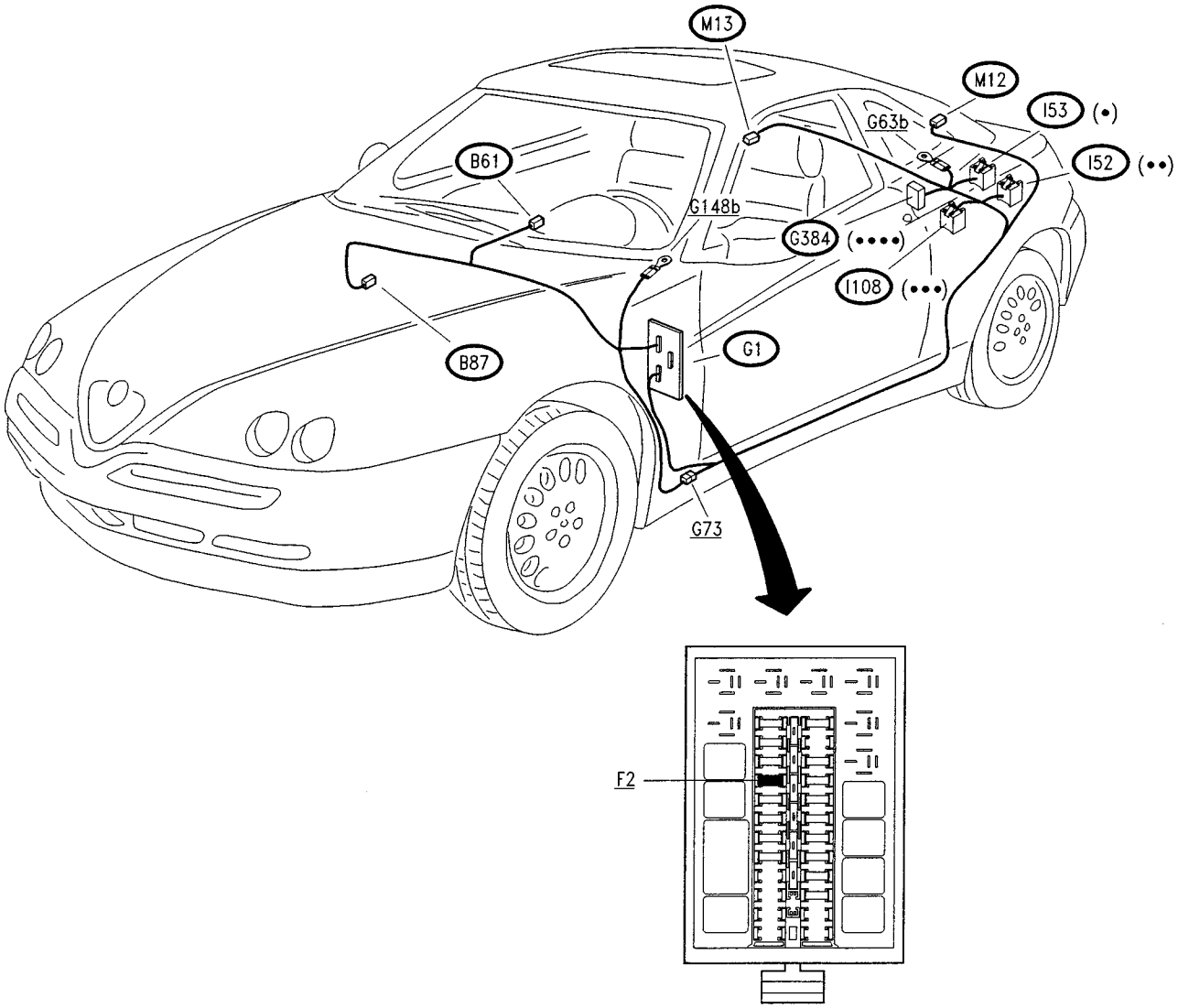

(•) White base
(••) Green base
(•••) Blue base
(••••) Black fuseholder

FAULTFINDING TABLE

Failure	Component to be checked								
	F2	G384	M12	M13	I52	I53	B87	B67	I108
Boot opening control		•	•		•		•		•
Fuel flap opening control		•		•		•		•	•
Fuel flap opening switch lighting (with sidelights on)								•	
Glove box lighting (with glove box open)	•						•		

CHECK COMPONENTS

Boot opening electromagnet M12

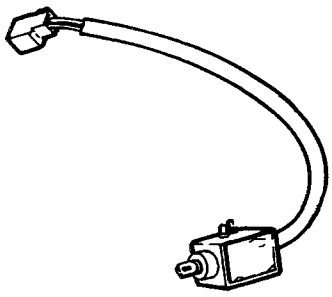

SPECIFICATIONS	
Nominal voltage	12V
Absorbed current	31A
Magnetic core stroke	7 ± 0.5 mm

Fuel flap opening electromagnet M13

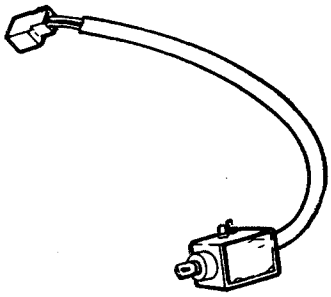

SPECIFICATIONS	
Nominal voltage	12V
Absorbed current	31A
Magnetic core stroke	7 ± 0.5 mm

HOOD (SPIDER only)

INDEX

WIRING DIAGRAM (up to chassis no.___)

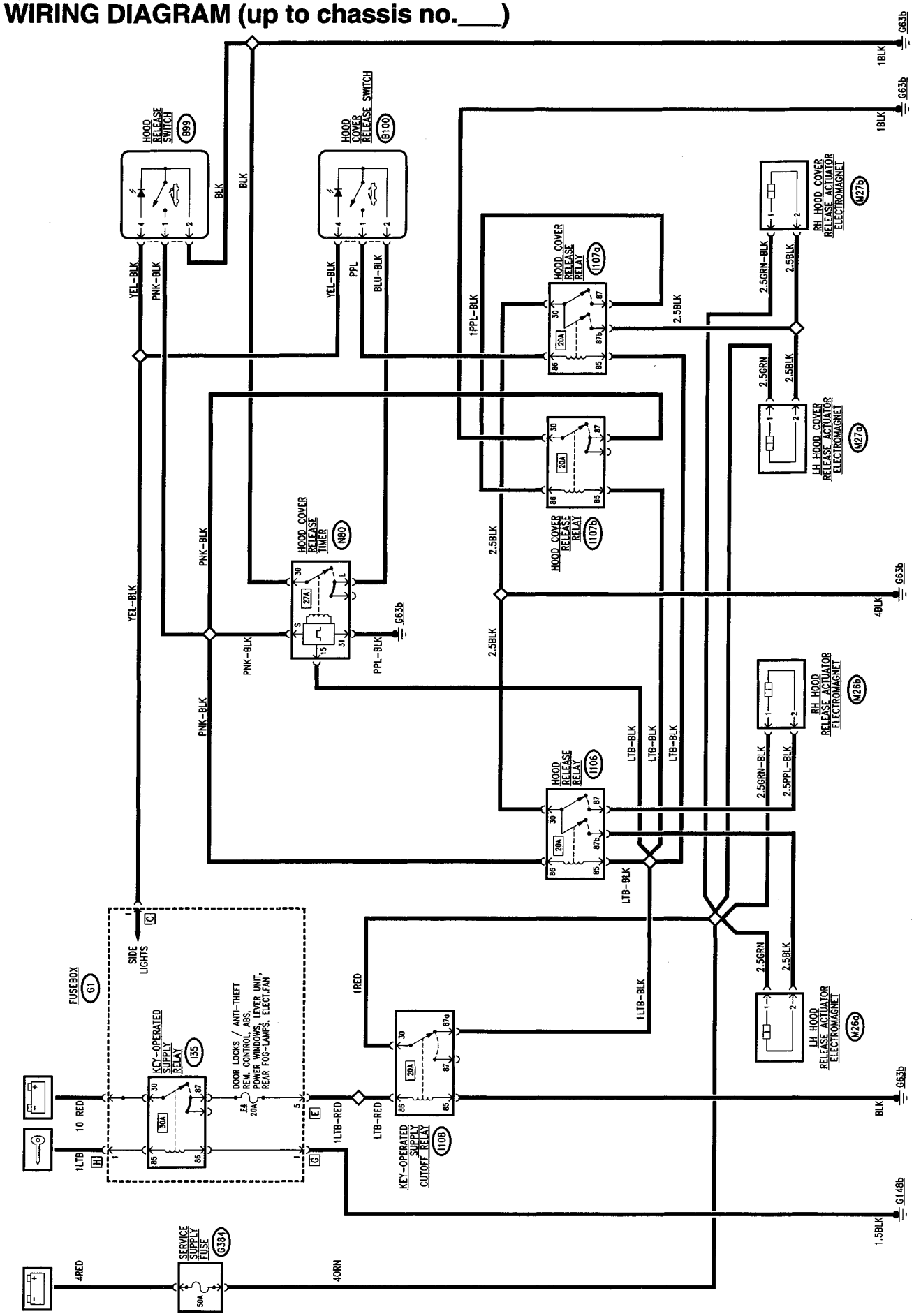

WIRING DIAGRAM (from chassis no.___)

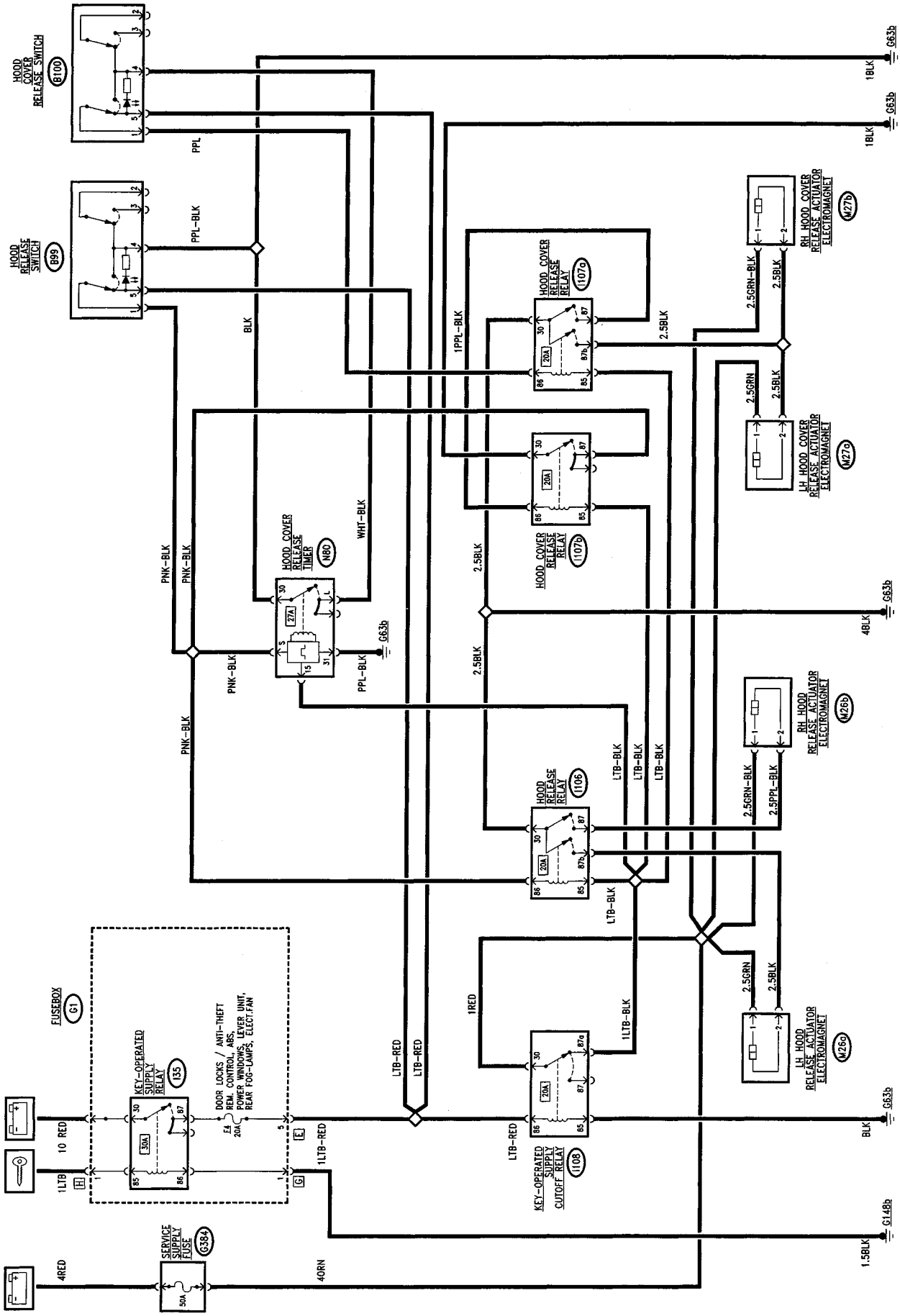

GENERAL DESCRIPTION

In the SPIDER, opening/closing the hood is facilitated by two electrical actuators: the first one releases the hood at the rear when it is closed; the second one opens the hood cover so that the hood can be folded in or taken out.

For each of these functions a special switch commands one or more relays which in turn operate a pair of release actuators. The switches are located on the rear side panel behind the driver's seat.

N.B. Both devices can be operated only with the ignition key removed or in the STOP position.
The hood cover can only be released after the hood has been released.

All the operating relays, the supply fuse and the "key-operated cutout" relay are to be found in the boot.

FUNCTIONAL DESCRIPTION

The electromagnets **M26a** and **M26b** which operate the release of the hood are powered with battery voltage via wander fuse **G384**; the earth signal is received from the corresponding relay **I106**, which has the energizing line leading from relay **I108** - this is a shunt which sends the power to **I106** and the other relays only when it "feels" the signal of the key turned to "MARCIA"; in fact when the key is turned this supply cuts out. The signal that energizes relay **I106** leads from switch **B99** behind the driver's seat: the energized relay supplies the two electromagnets **M26a** and **M26b** which release the rear fastening of the hood.

The hood cover is only released when the hood has been released previously: this takes place via the timer **N80** and the two relays **I107a** and I107b. The "hood release" control signal energizes timer **N80** (pin S) which for appr. 20 minutes sends an earth signal to switch **B100** which is active only in this case. This is the only possible way to send a control signal to energize relay **I107a** which sends an earth signal to the two electromagnets **M27a** and **M27b** which release the fastening of the hood cover - the two electromagnets are powered with battery voltage via wander fuse **G384** -.
The energizing line for relay **I107a**, like **I107b** leads from relay **I108,** therefore, their supply is cut out when the key is turned.
Simultaneously another earth signal - **I107a** has a double contact - is sent, via the other relay **I107b**, to pin S of timer **N80**, to cut out timing.

Up to chassis no.___, switch **B99** is lit when the side lights are on, from chassis no.___ it is lit up with the key at MARCIA, while switch **B100** lights up only when it is pressed.

LOCATION OF COMPONENTS

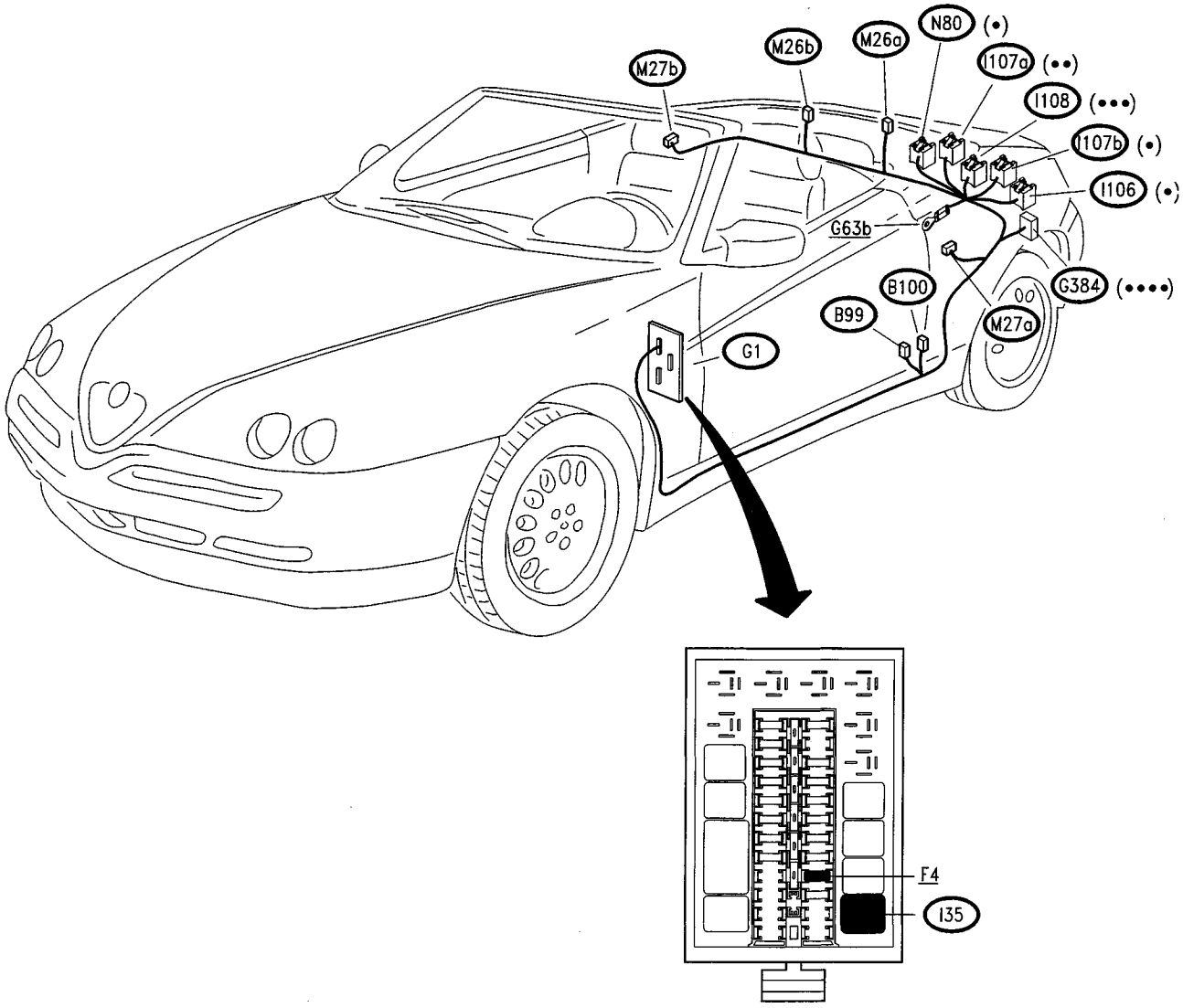

(•) Black base
(••) Red base
(•••) Blue base
(••••) Black fuseholder

FAULTFINDING TABLE

Fault	Component to be checked										
	G384	M26a	M26b	M27a	M27b	I106	I107a	I107b	B99	B100	N80
Hood release control	•	•	•			•			•		
Hood cover release control (*)	•			•	•		•	•		•	•
Release switches lighting (with sidelights on) (**)									•	•	

(*) N.B. this function can only be operated after releasing the hood.
(**) Switch B100 is only illuminated when hood cover releasing is possible (after the hood has been locked).

CHECK COMPONENTS

Hood release electromagnet (M26a) (M26b)

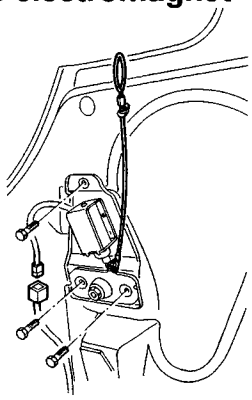

SPECIFICATIONS	
Nominal voltage	12V
Absorbed current	31A
Magnetic core stroke	10 ± 0.5 mm

Hood cover release electromagnet (M27a) (M27b)

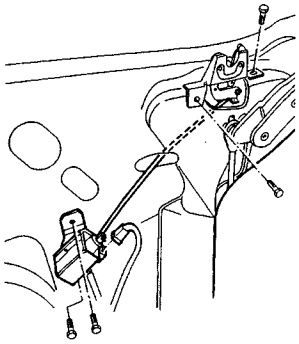

SPECIFICATIONS	
Nominal voltage	12V
Absorbed current	31A
Magnetic core stroke	7 ± 0.5 mm

Hood cover release timer (N80)

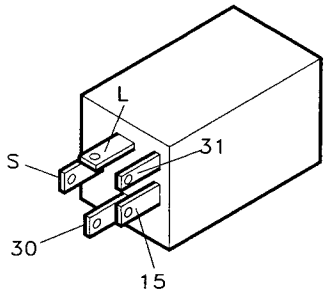

Check the device: see **TEST A**

CHECK HOOD COVER RELEASE TIMER (N80)	TEST A

TEST PROCEDURE	RESULT	CORRECTIVE ACTION
A1 CHECK VOLTAGE – Disconnect device **N80** and check on the base for 0V at pins 30 and 31; with the ignition key at MARCIA, 12V between pins 15 and 30	OK ▶ ~~OK~~ ▶	Carry out **step A2** Check floating fuse **G384** and relay **I108.** Restore the wiring between **N80** and earth **G63b**
A2 CHECK COMMAND SIGNAL – Operate switch **B99** and check for an earth at pin S of **N80**	OK ▶ ~~OK~~ ▶	Insert device **N80** on the base and continue with **step A3** Restore the wiring between **B99** and **N80**, and between **B99** and earth **G63b**
A3 CHECK HOOD COVER OPERATION – Operate switch **B99** and check for 12V at pin L of **N80**	OK ▶ ~~OK~~ ▶	DEVICE **N80** IS WORKING PROPERLY. Check the other components of the system and their connections CHANGE DEVICE **N80**

AUTOMATICALLY-OPERATED HOOD

INDEX

INTRODUCTION

The entire electrohydraulic system is governed by a specific electronic control unit.

The control unit receives the position signals from the sensors (switched) located on the locks of the hood and of the hood cover and on the hood operating cylinders.

It also receives the consent signals to operate the system: key at MARCIA, handbrake engaged and car speed.

On the basis of the memorised logic and the command signal leading from the control button, the control unit controls the solenoid valves of the hydraulic system and the electric locks.

Other output signals are sent to the led and to the diagnosis connector.

The figure below summarizes the flow of signals going in and out of the control unit.

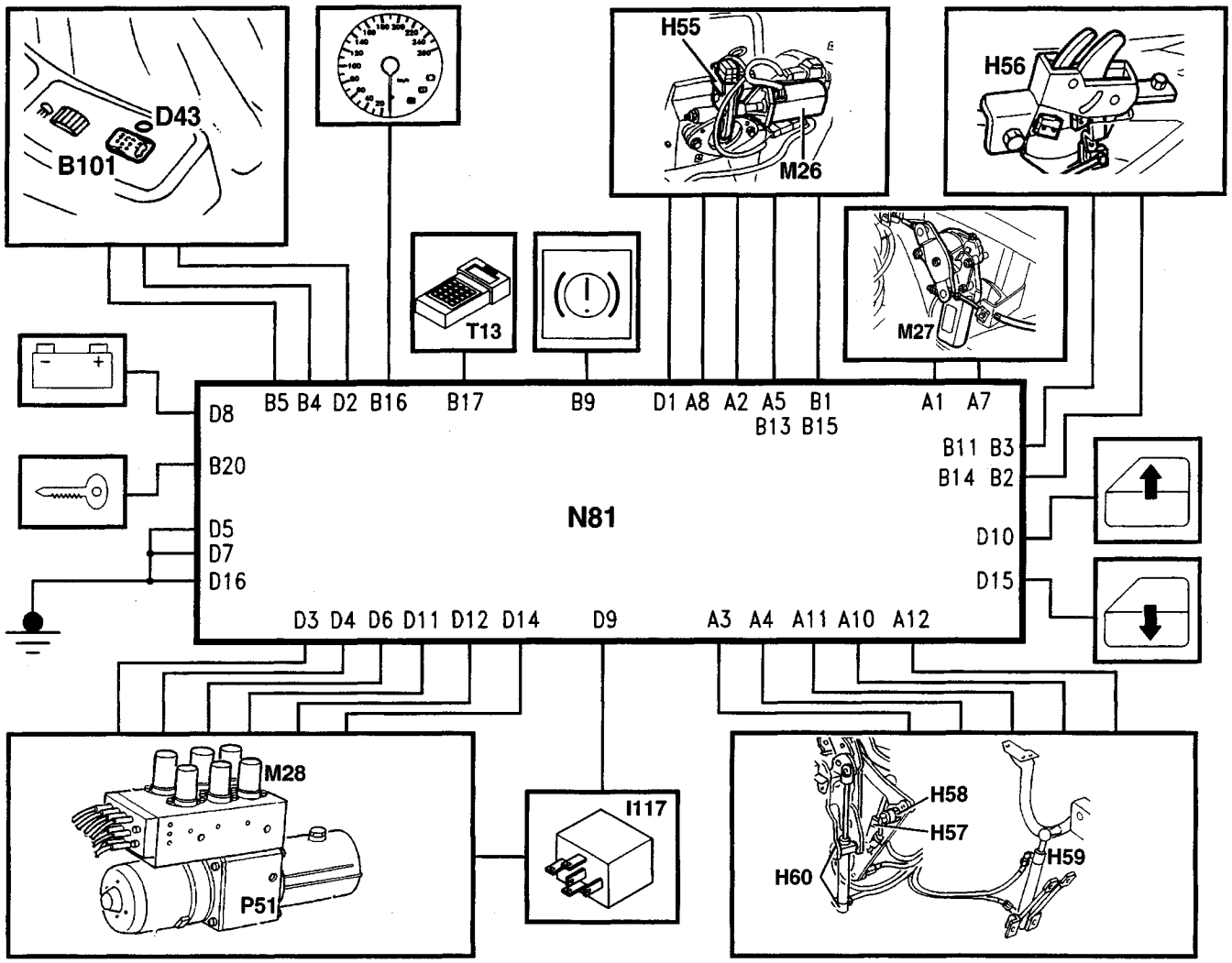

NOTE: *the components are identified by the code used in the wiring diagrams*

B101 *Automatic hood control switch*
D43 *Signalling led for automatic hood*
H55a *RH hood closing switch*
H55b *LH hood closing switch*
H56a *RH hood cover closing switch*
H56b *LH hood cover closing switch*
H57 *5th arc raised switch*
H58 *Intermediate 5th arc switch*
H59 *Hood cover raised switch*
H60 *Hood position switch*
I117 *Automatic hood electric pump relay*
M26a *LH hood release actuator*
M26b *RH hood release actuator*
M27 *Hood cover release actuator*
M28 *Automatic hood solenoid valves*
N81 *Automatic hood control unit*
P51 *Automatic hood control pump*
T13 *Diagnosis connector for Alfa Romeo Tester*

Operating logic carried out by the control unit

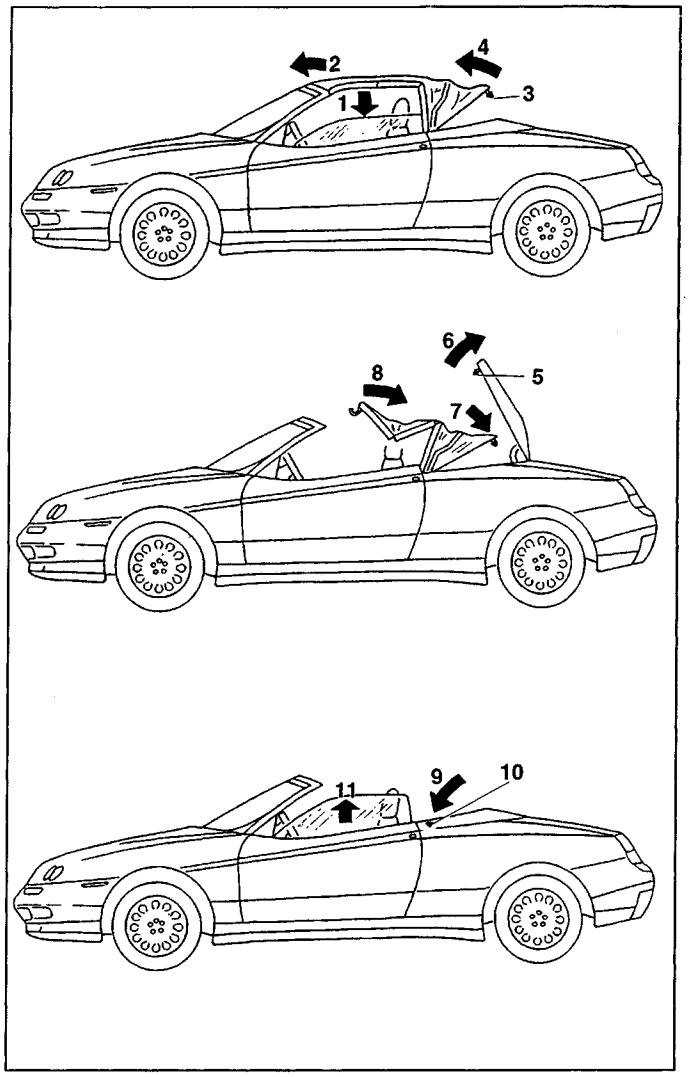

OPENING CYCLE:

1. lowering of the windows

the windows are lowered for appr. 1 second.

2. hood closing

the hood closing solenoid valves (no.4) and the electric pump ae operated; the solenoid valve remains active also at the signal from "hood closed" switch;

3. opening of 5th arc locks

the release relay of the two locks is activated until the signal of the "5th arc lowered" switch is received. The hood closing solenoid valve (no.4) remains active to keep the hood in position;

4. 5th arc raising

the 5th arc raising solenoid valve (no.6) is actvated: after 0.6 seconds from the signal from the "5th arc raised" switch operations continue with step 5;

5. hood cover lock opening

the 5th arc raising solenoid valve (no. 6) remains active, and the hood cover lock release relay is activated: when the signal is received from the "hood cover release" switch the relay remains active for another 0.2 seconds;

6. hood cover opening

the 5th arc raising solenoid valve (no. 6) remains active while the hood cover opening solenoid valve (no. 1) is also activated: at the signal from the "hood cover raised" switch operations continue with the next step;

7. 5th arc lowering

the hood cover opening solenoid valve (no. 1) remains activated while the 5th arc lowering solenoid (no. 5) is also activated and then deactivated after 0.2 seconds from the signal from the "intermediate 5th arc" switch.

8. hood opening

the hood cover opening solenoid valve (no.1) remains activated while the hood opening solenoid valve (no. 4) is also activated; at the signal from the "hood open" switch the hood cover opening solenoid valve is deactivated, and after 0.5 seconds operations continue with step 9.

9. hood cover closing

the hood cover closing solenoid valve (no. 2) is activated: at the signal from the "hood cover closed" switch the electric pump is deactivated, while the solenoid valve remains active;

10. hood cover lock closing

the hood cover lock closing relay is activated: when the signal from the "hood cover lock closed" switches is received the relay remains active for another 0.2 seconds;

11. window closing

as soon as the hood cover is closed again, the windows are highered for a maximum of 12 seconds.
Releasing the system operation button during this last operation the windows stop.

CLOSING CYCLE

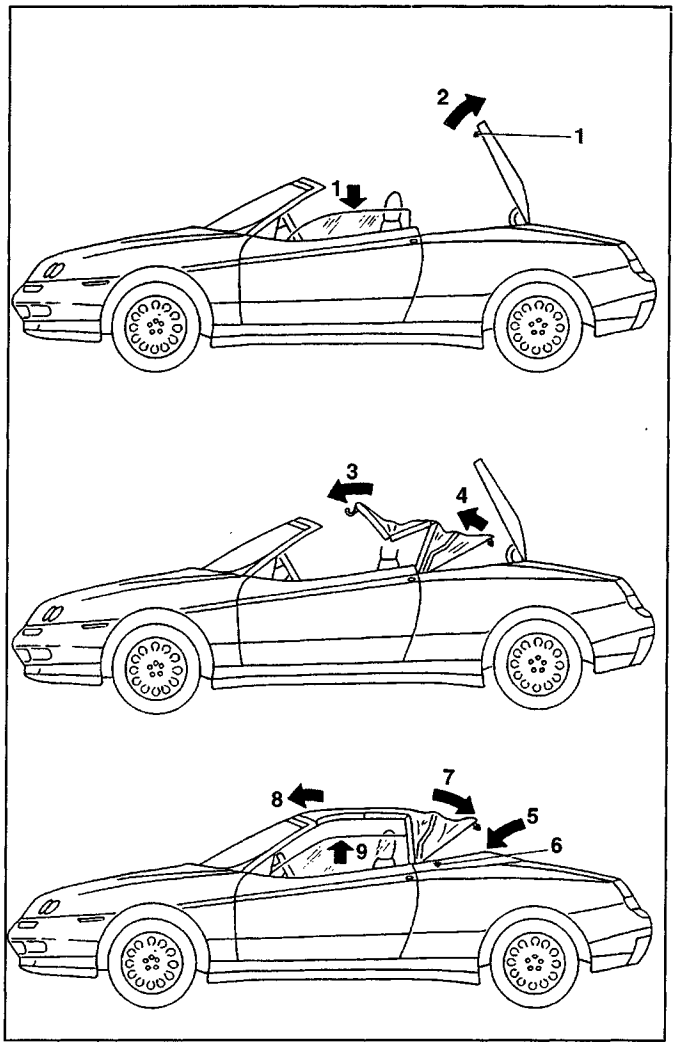

1. hood cover lock opening and lowering of the windows

the hood cover lock release relay is activated: when the signal is received from the "hood cover release" switches the relay remains active for another 0.2 seconds.
Simultaneously the windows are lowered for appr. 1 second;

2. hood cover opening

the hood cover opening solenoid valve (no. 1) is activated: after 0.5 seconds from the signal from the "hood cover raised" switch operations continue with step 3;

3. hood closing

The hood cover opening solenoid valve (no. 1) remains activated while also the hood closing solenoid valve (no. 3) is activated and then deactivated at the signal from the "hood closed" switch;

4. 5th arc raising

The hood cover opening solenoid valve (no. 1) remains activated while the 5th arc raising solenoid valve (no. 6) is also activated; at the signal from the "5th arc raised" switch the hood cover opening solenoid valve is deactivated, and after 1 second operations continue with step 5;

5. hood cover closing

the 5th arc raising solenoid valve (no. 6) remains active while the hood cover closing solenoid valve (no. 2) is activated until receiving the signal from the "hood cover closed" switch;

6. hood cover lock closing

the hood cover lock closing relay is activated: when the signal is received from the "hood cover lock closed" switches the relay remains active for another 0.2 seconds.

7. 5th arc lowering and locks closing

the hood opening and closing solenoid valves (no. 3 and 4) are activated to keep the hood in position; at the signal from the "intermediate 5th arc" switch the relay for closing the two locks is activated remaining active for 0.5 seconds from the signal of the "5th arc locks closed" switches.
The 5th arc lowering solenoid valve (no. 5) is also activated and then deactivated after 1 second from the signal from the "5th arc closed" switch

8. facilitated front catching

the hood opening solenoid valve (no. 4) is deactivated to lower the pressure in the hood cylinders, thereby facilitating manual catching of the hood to the windscreen.
At this point the led goes off, while the hood closing solenoid valve (no. 3) remains active for another 20 seconds;

9. windows closing

pressing the button again - within 25 seconds - the windows are highered for a maximum of 12 seconds.

Releasing the system operating button during this operation the windows stop.

Electronic control unit (N81)

The electronic control unit is housed in the rear console of the passenger compartment next to the electrohydraulic unit:

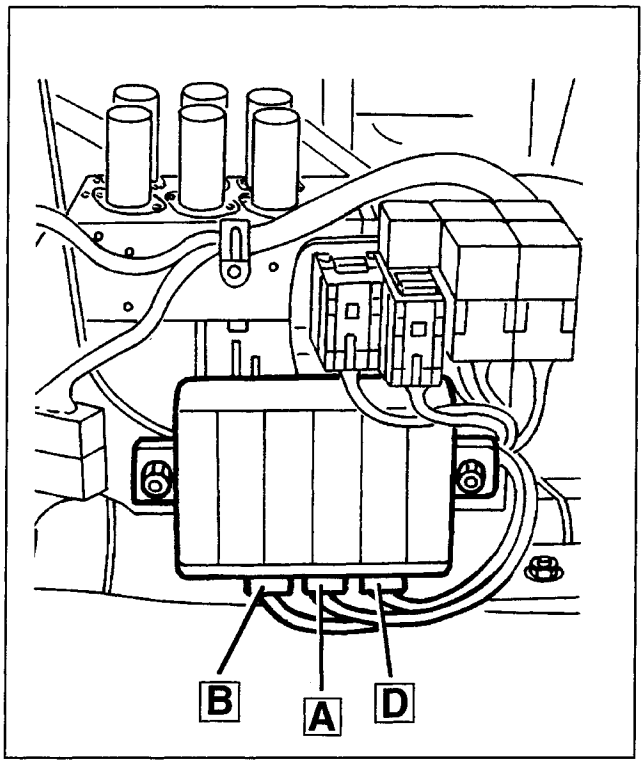

CONTROL UNIT PIN-OUTS:

connector A

1 hood cover release command
2 RH hood closing command
3 hood position switch signal (lowered)
4 hood position switch signal (raised)
5 LH hood closing switch signal (approached)
7 hood cover closing command
8 hood release command
10 5th arc intermediate switch signal
11 5th arc raised switch signal
12 hood cover raised switch signal connector B:

connector B

1 LH hood closing switch signal (locked)
2 RH hood cover closing switch signal (approached)
3 LH hood cover closing switch signal (locked)
4 command signal from switch (closing)
5 command signal from switch (opening)
9 handbrake engaged signal
11 RH hood cover closing switch signal (locked)
13 RH hood closing switch switch signal (locked)
14 LH hood cover closing switch signal (approached)
15 RH hood closing switch signal (approached)
16 tachometric signal
17 diagnosis line K
20 key-operated supply

connector D

1 LH hood closing command
2 luminous led signal
3 command for solenoid valve no. 6 (5th arc raising)
4 command for solenoid valve no. 2 (hood cover closing)
5 earth
6 command for solenoid valve no. 1 (hood cover opening)
7 earth
8 direct supply
9 pump relay command
10 power window rising command
11 command for solenoid valve no. 3 (hood opening)
12 command for solenoid valve no. 4 (hood closing)
14 command for solenoid valve no. 5 (5th arc lowering)
15 power window lowering command
16 earth

Hood locks

The two locks that lock the 5th arc of the hood on the hood cover are formed of a threaded pin (A) which engages on a lead screw (B) operated by a motor. (**M26a/b**)

On the lock there is a microswitch (**H55a/b**) with two contacts: the first (C) signals the "approach" of the 5th arc pin to the lead screw, while the second (D) signals the clamping of the lock.

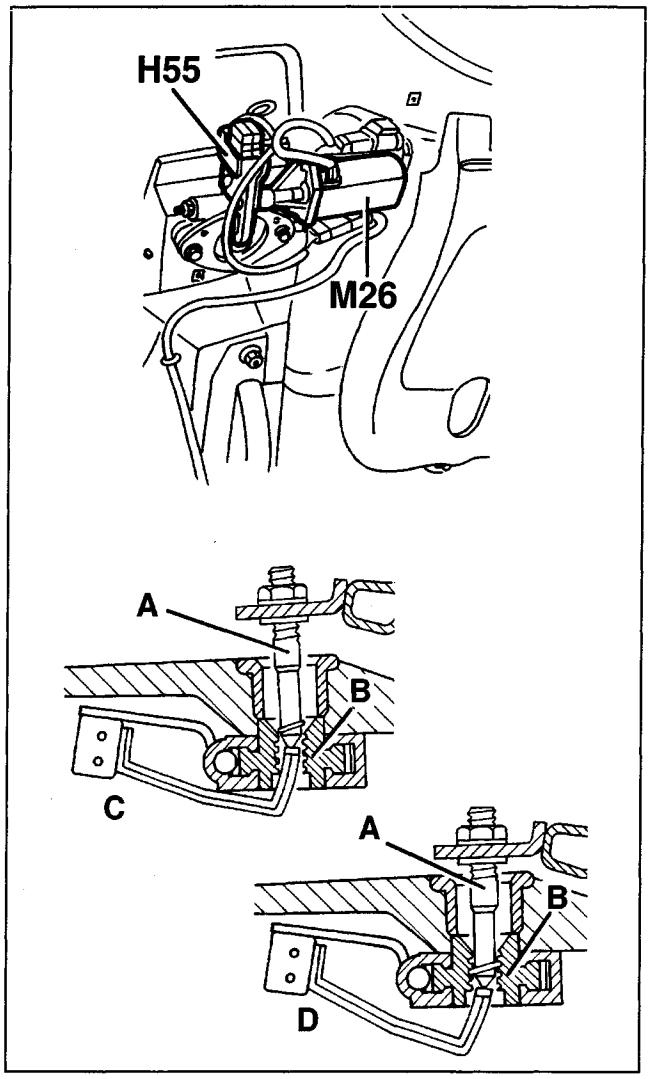

Hood cover locks

The two hood cover locks are controlled by the centre gear motor (**M27**) through cables (A).

Also on these locks there is a microswitch (**H56a/b**) with two contacts: the first (C) signals the "approach" of the hood cover to the lock, while the second (D) signals the clamping of the lock.

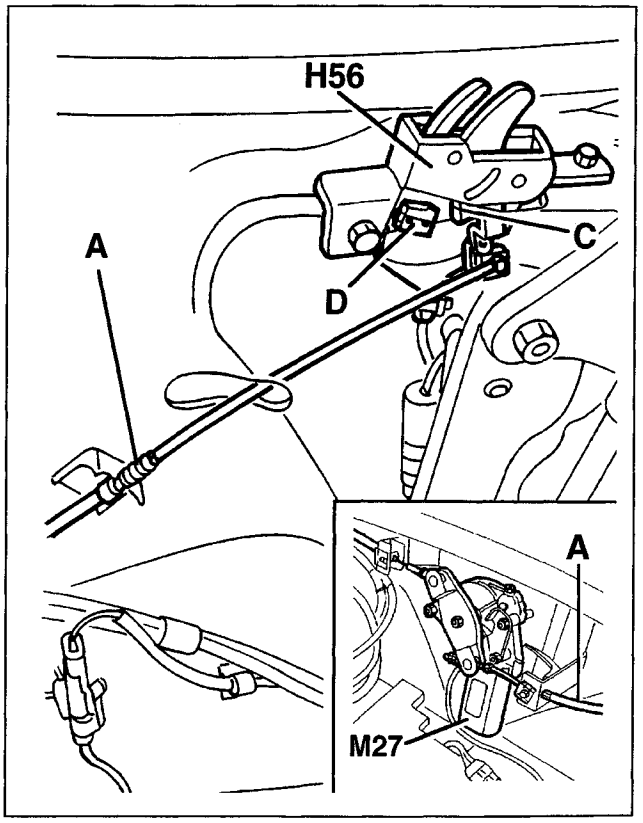

Switches on cylinders

On the operating cylinders of the **left hand side** there are four switches, namely:

- 5th arc raised switch (**H57**), on the 5th arc cylinder;
- hood cover raised switch (**H59**), on the hood cover cylinder;
- hood position switch (**H60**) on the hood cylinder: this comprises two contacts : the first (A) signals that the hood is lowered, the second (B) that the hood is raised.

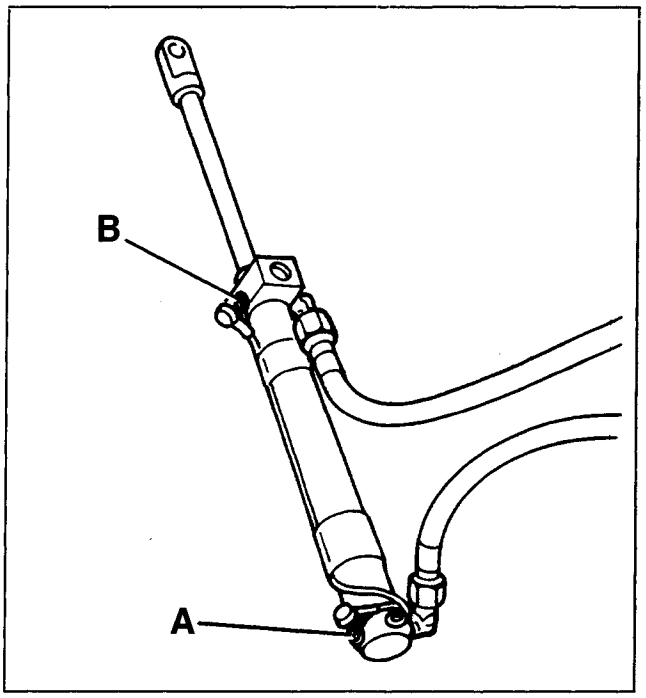

These four switches comprise an electric contact (1) which connects to earth via the spring (A) with the PISTON RAISED or (only for the hood cylinder) an electric contact (2) which connects to earth via spring (B) with the PISTON LOWERED.

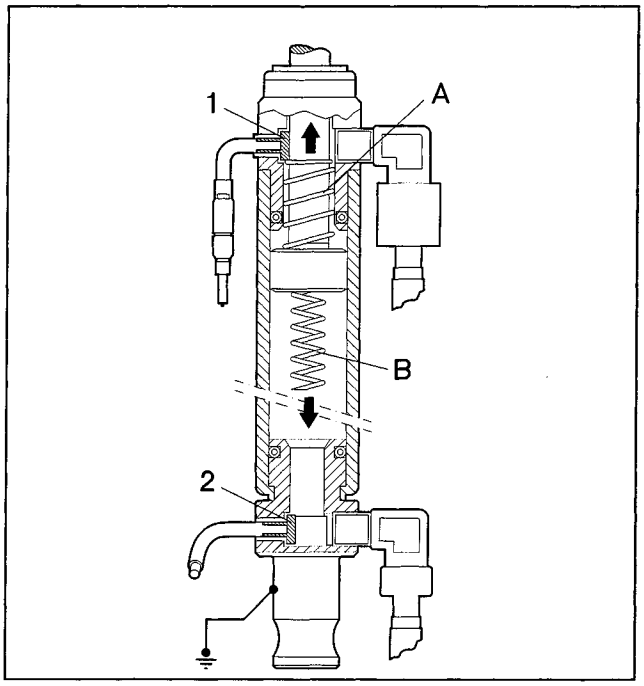

Intermediate 5th arc switch

This is a ball contact (**H58**) which connects to earth when the frame of the 5th arc takes a precise position during the closing of the 5th arc itself: this allows the control unit to operate the motors of the pins of the 5th arc locks a few seconds before the 5th arc is completely closed in order to obtain improved "catching" between the pin and the lock.

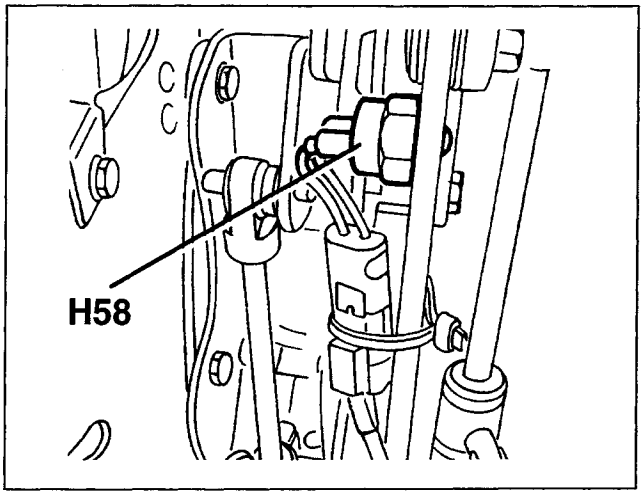

WIRING DIAGRAMS

1. CONTROL UNIT AND CONSENT SIGNALS

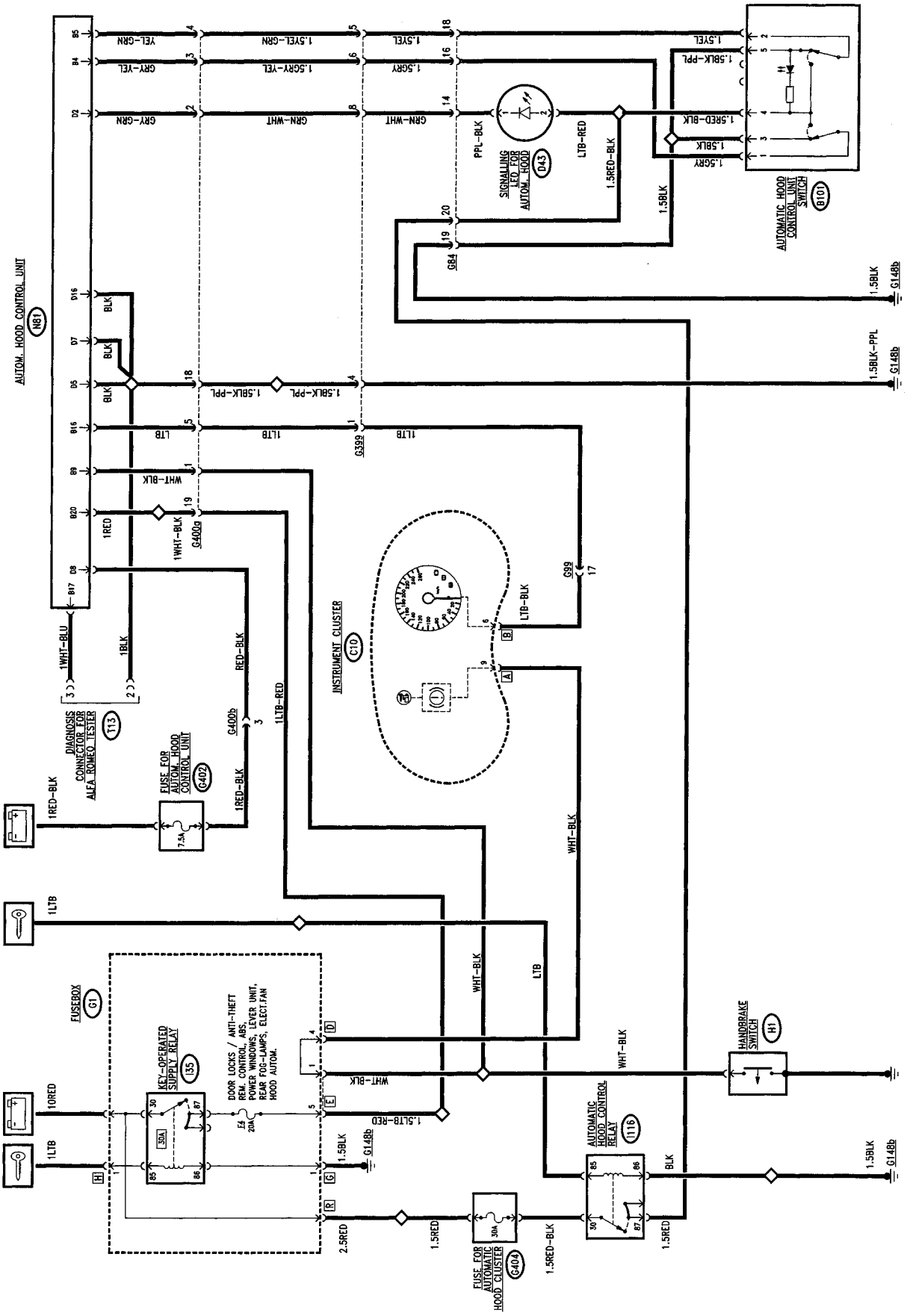

2. CONTROL SWITCHES

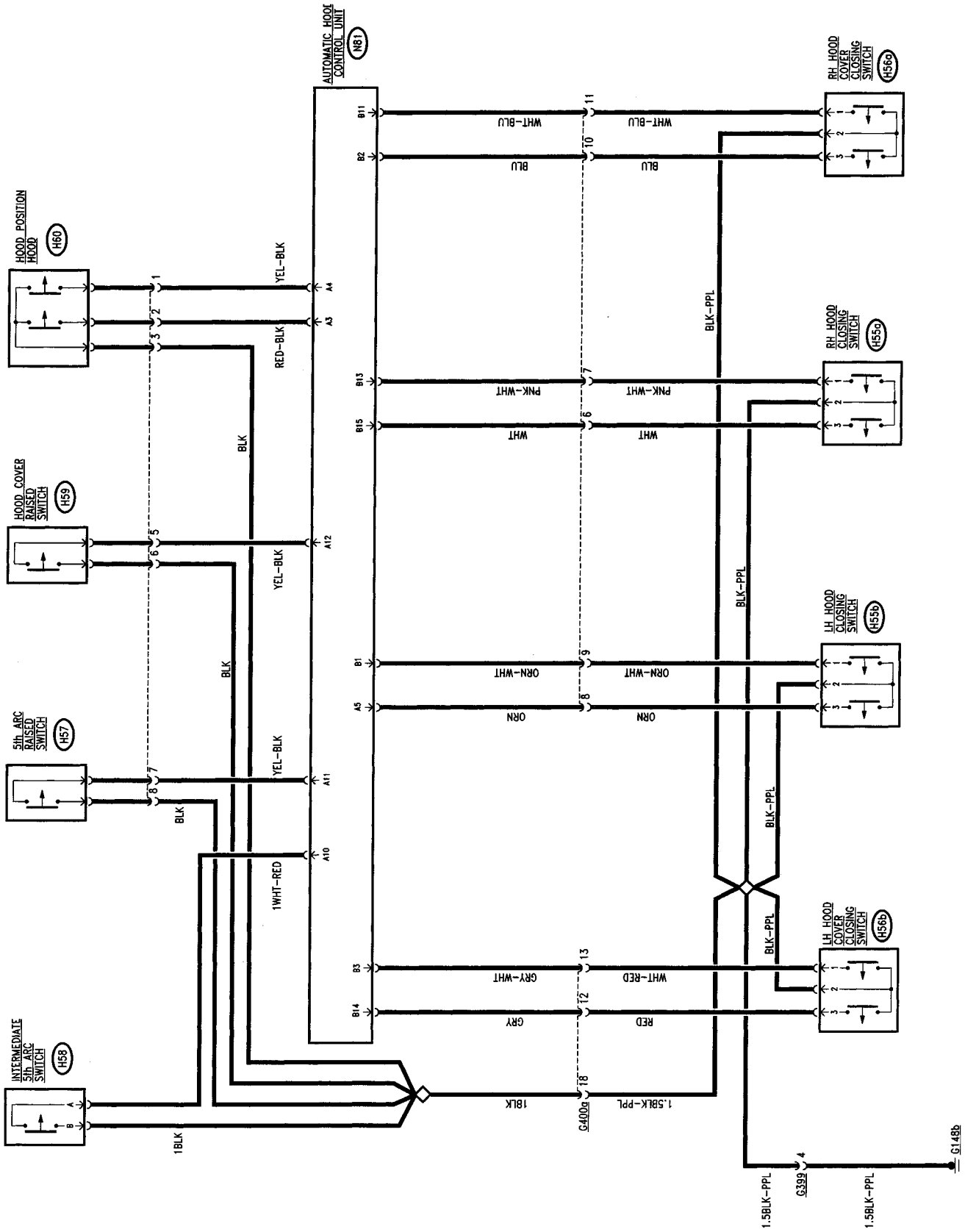

3. OPERATION OF LOCKS

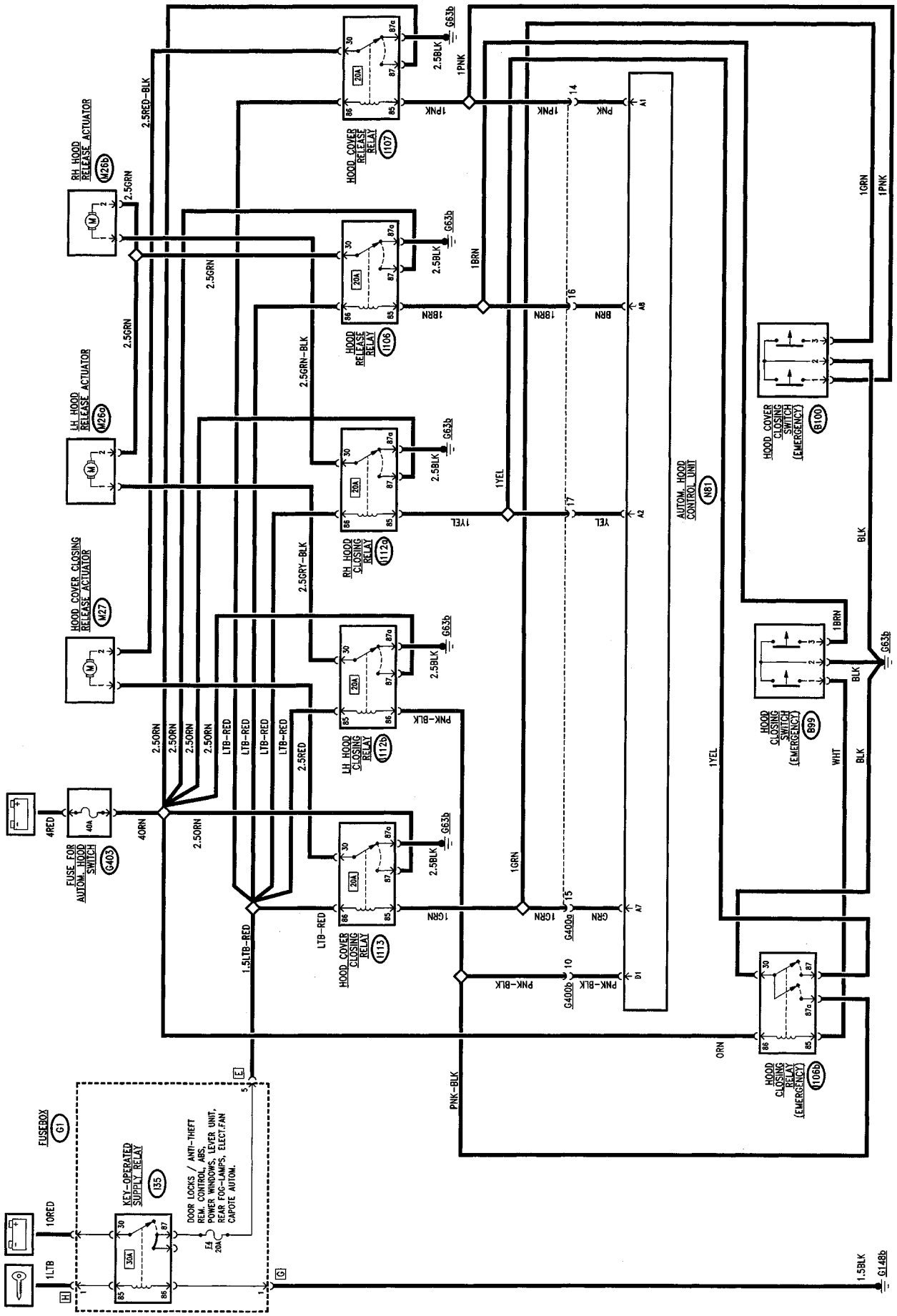

4. HYDRAULIC SYSTEM CONTROL

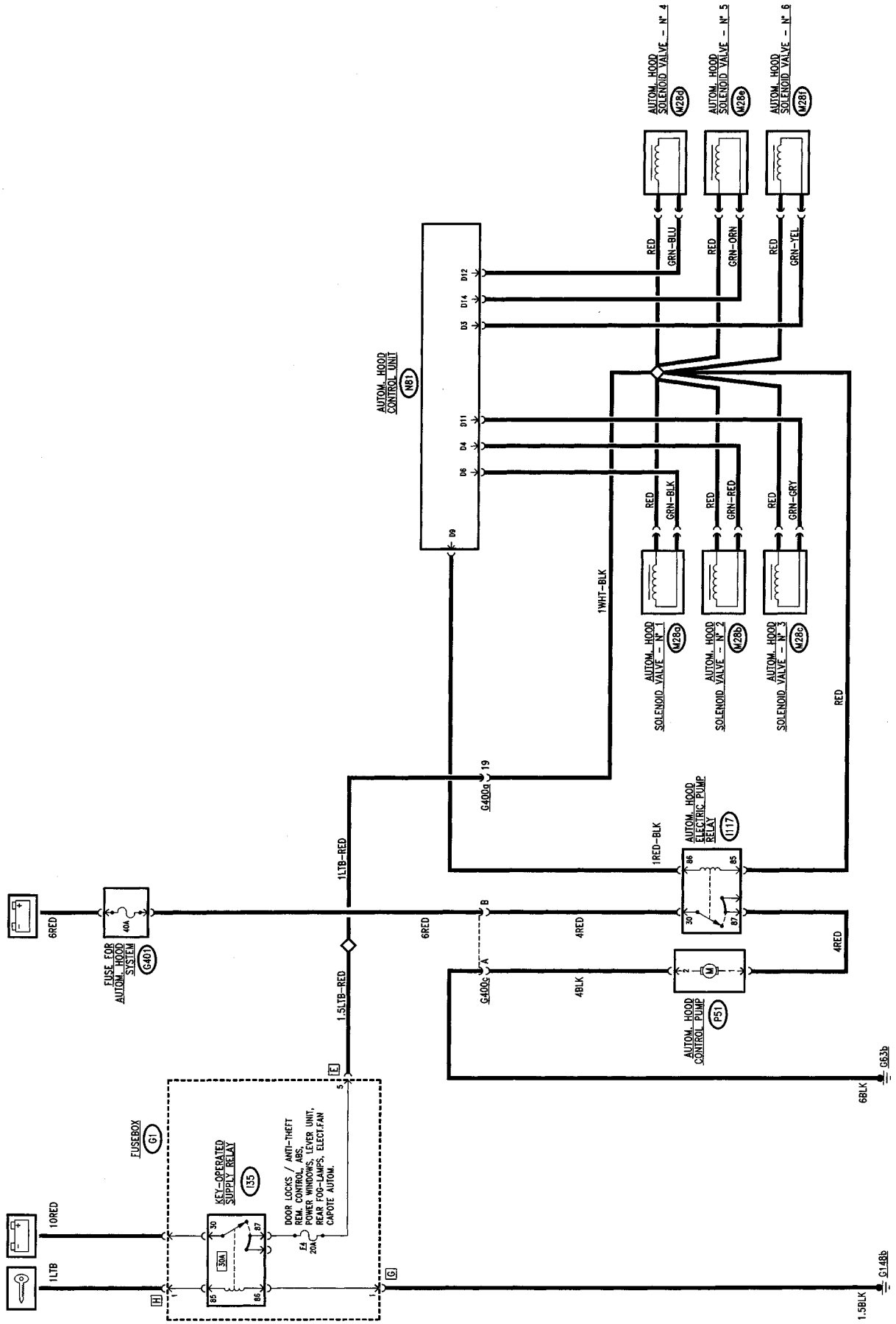

5. POWER WINDOWS CONTROL

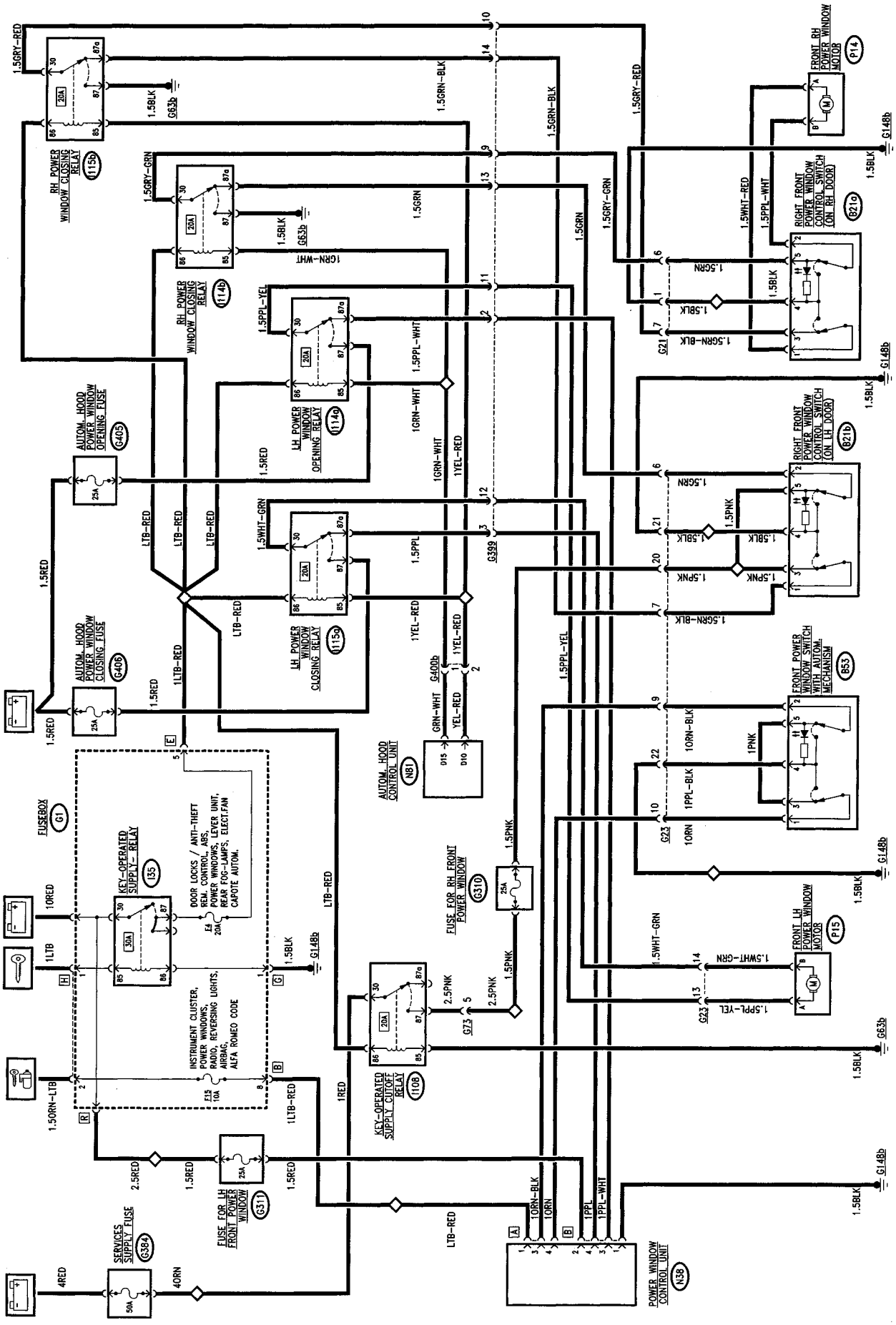

FUNCTIONAL DESCRIPTION

The electronic control unit **N81** controls the entire electrohydraulic system that automatically opens/closes the hood.

The control unit **N81** is supplied with 12V direct at pin D8 through the line protected by fuse **G402** (7.5A), and with "key-operated" 12V at pin B20 through the line of fuse **F4** of fusebox **G1**; pins D5, D7 and D16 are earthed.

Operation of the hood takes place pressing the special button **B101**, to be found on the centre tunnel. A 12V and an earth signal is sent alternately to indicate opening and closing: 12V to pin B4 (hood closing) and 12 V to pin B5 (hood opening); the 12V reach the "key-operated" switch through the hood control relay **I116** and fuse **G404** (30A).

Next to the button there is a luminous led **D43** supplied with "key-operated" 12V like button **B101**, and turned on by the control unit, from pin D2, to indicate that the system is working correctly or the occurrence of faults.

The control unit receives a series of consent signals from the switches and from the other systems of the car.

The "handbrake engaged" signal reaches pin B9 : this is the same signal that switch **H1** sends to the warning light on the instrument cluster **C10.**; pin B16 receives the tachometric signal picked up especially from the cluster **C10.**

Two sets of switches are located on the locks of the hood and hood cover and on the hood operating cylinders.

NOTE : all the switches are N.O. and, if they are closed, they send an earth signal to the control unit.

The switches on the lock of the left-hand hood **H55b** and the right-hand hood **H55a** send two earth signals: one indicates that the hood has approached the lock (signals to pin A5 and B15), the other that the lock is actually closed (signals at pin B1 and B13).

In the same way for the locks of the left-hand **H56b** and right-hand hood cover **H56a**, "approach" signals are sent to pin B14 and B2 and the closing ones to pin B3 and B11.

The hood cover raised switch **H59** is to be found on the left control cylinder and it signals the control unit - pin A12 - the maximum raising position.

The double hood position switch **H60** is located on the left control cylinder and signals the control unit the hood maximum raising position - pin A4 - and the maximum lowering position - pin A3.

The 5th arc raised switch **H57** is located on the left control cylinder and signals the control unit - pin A11 - the maximum raising position of the 5th arc.

The 5th arc intermediate switch **H58** (ball contact) is located on the control linkage in such a position as to signal the control unit - pin A10 - that the 5th arc is lowering so as to operate the lock motors.

As a result of the information received by the sensors, the control unit commands the locking and releasing of the locks of the hood and hood cover, and adjusts, through an electric pump and six solenoid valves, the hydraulic hood raising and lowering system.

The two hood locks (right and left) are controlled by two motors **M26a** and **M26b** which close or open the lock as the 12V/earth supply at the two terminals varies: this takes place via the hood release relay **I106** and the two hood closing relays **I112a** and **I112b**.

These are diverters which are energised by the "key-operated" line of fuse **F4** of fusebox **G1** and by a command signal leading from the control unit **N81**: respectively from pin A2 for closing the RH lock, D1 for closing the LH lock, and A8 for releasing the hood: if energised the relay reverses the supply on the motors, the direct supply of which leads from a special fuse **G403** (40A).

In the same way the hood cover lock - only one, in the central position - is controlled by motor **M27** which closes or opens the lock as the 12V/earth supply at the terminals varies: this takes place via the hood cover release relay **I107** and locking relay **I113**. These are diverters energised by the "key-operated" of fuse **F4** of fusebox **G1** and by a command signal leading from the control unit **N81**: respectively from pin A7 for closing the lock and A1 for releasing: if energised the relay reverses the supply on the motors, the direct supply of which leads from a special fuse **G403** (40A).

Two emergency switches make it possible to manually operate the hood, locking and releasing the locks. Switch **B100** corresponding to the hood cover lock sends an earth signal to the release relay **I107** or to the locking one **I113** in the same way as takes place through the control unit during automatic operation. Switch **B99** corresponding to the hood lock sends an earth signal to the release relay **I106** orto the locking relay **I112a** and **I112b**.

The control unit also controls the operation of the hydraulic circuit that controls the six pistons for raising/lowering the hood cover, 5th arc and the hood itself.

The electric pump **P51** pressurises the hydraulic operating fluid when it is supplied by the control unit **N81** via the power relay **I117**; this is supplied by the line of fuse **G401** (40A) and energised with the "key-operated" supply and by command signal of the control unit - pin D9.

The six solenoid valves which also receive the "key-operated" supply are controlled directly by the control unit:

- pin D6 controls solenoid valve no. 1 **M28a** (hood cover opening)
- pin D4 controls solenoid valve no. 2 **M28b** (hood cover closing)
- pin D11 controls solenoid valve no. 3 **M28c** (hood closing)
- pin D12 controls solenoid valve no. 4 **M28d** (hood opening)
- pin D14 controls solenoid valve no. 5 **M28e** (5th arc lowering)
- pin D3 controls solenoid valve no. 6 **M28f** (5th arc raising)

During the hood opening/closing sequence, the control unit **N81** also controls the raising or lowering of the door windows. This takes place via two relays for each window; the command signal for lowering the windows - pin D15 - energises two relays **I114a** and **I114b**, which receive the "key-operated" supply from the line of fuse **F4** of fusebox **G1**: there are two diverters which in the rest position "relay" the signal leading from the "normal" circuit of the power windows, which are thus operated manually through the switches **B53**, **B21a** and **B21b** and the control unit **N38** which controls the motors **P15** and **P14** (for further details, see the "Power windows" section). Conversely, if energised they control motors **P15** and **P14** directly, via a supply leading from a special fuse **G405** (25A).

In the same way they command signal of the control unit for highering the windows - pin D10 - energises two relays **I115a** and **I115b**, which receive the "key-operated" supply from the line of fuse **F4** of fusebox **G1**: there are two diverters which in the rest position "relay" the signal leading from the "normal" circuit of the power windows. Conversely, if energised they control motors **P15** and **P14** directly, via a supply leading from a special fuse **G405** (25A).

The control unit **N81** memorises any faults detected during operation: this information may be read using the ALFA ROMEO TESTER connected with the diagnosis socket **T13**, and the outgoing signal - line K - from pin B17 of the control unit itself.

LOCATION OF COMPONENTS (1/2)

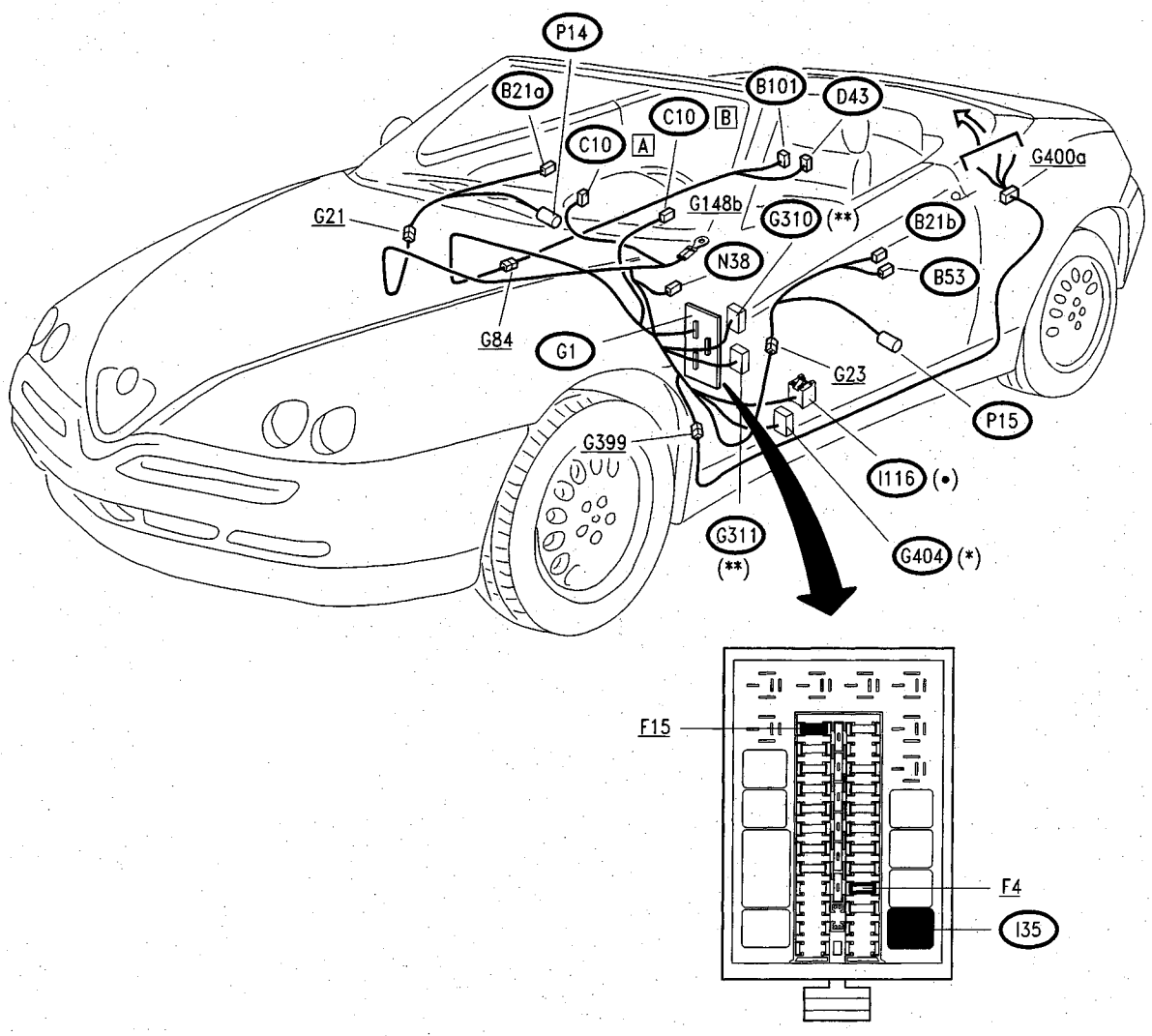

(•) Green base
(*) Green fuse holder
(**) White fuse holder

LOCATION OF COMPONENTS (2/2)

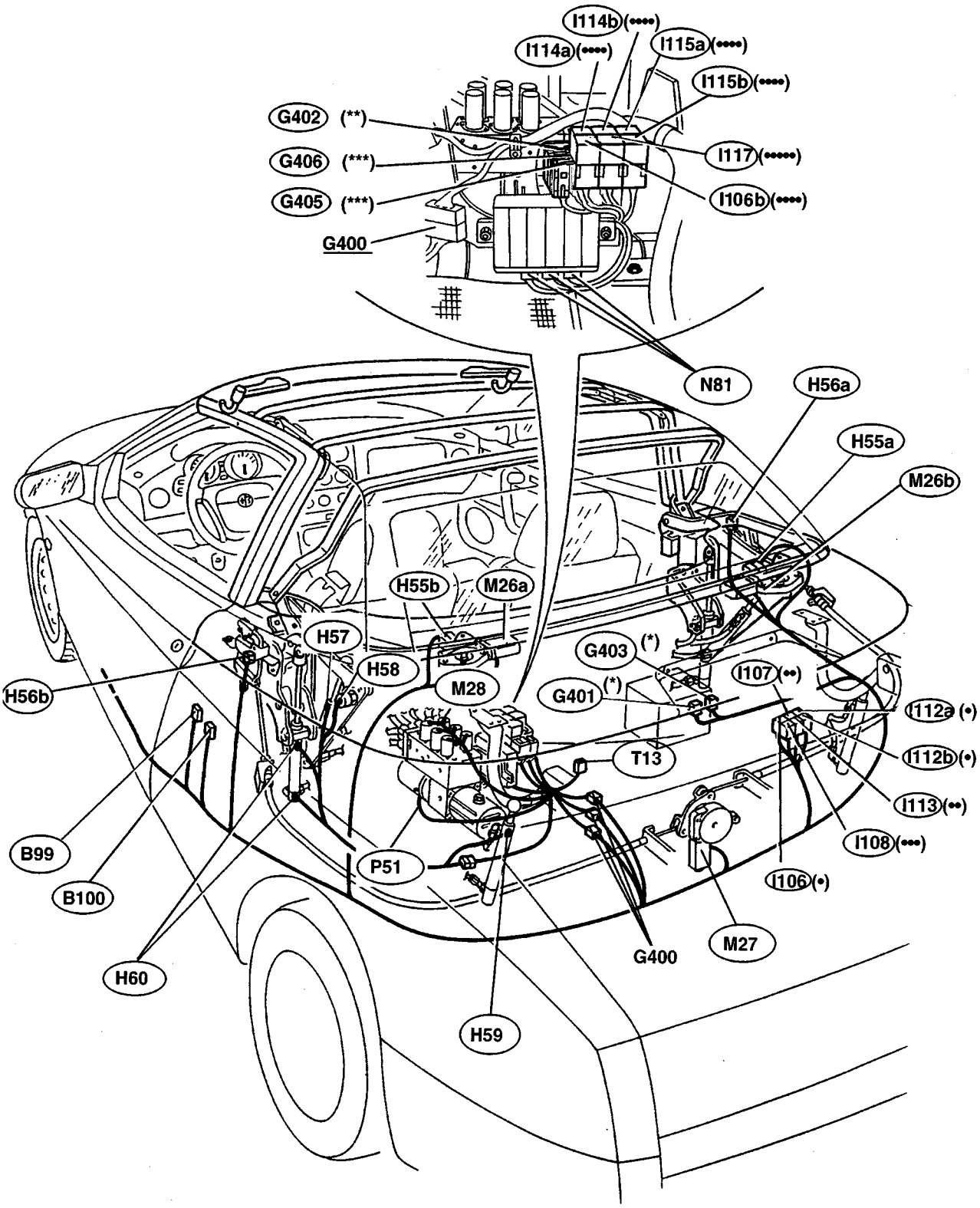

(•) Red base
(••) Brown base
(•••) Blue base
(••••) Grey base
(•••••) Black base

(*) Black fuse holder
(**) Brown fuse holder
(***) White fuse holder

FAULT FINDING

INITIAL TEST: turning the ignition key to MARCIA, the control unit carries out a self-diagnosis test of the entire system. If the result of this test is positive, the led at the side of the control button flashes for 1.5 seconds then goes off: conversely, if faults are detected, the led flashes for 10 seconds

- If the **led starts to flash**, this means that the system has memorised an operating fault. Try again moving the key to STOP and back to MARCIA, then proceed with Fault-finding as described in the following pages.

- If the **led flashes only with the button pressed**, this means that a manoeuvre error has been detected. For instance the handbrake has not been engaged.

- If the **led flashes upon completion of the operation**, or stays on permanently, this means that the hood is not correctly locked (open or closed).

The errors memorised may be "read" using the ALFA ROMEO TESTER connected to the diagnosis socket with the outgoing signal - line K - of the control unit itself.

When the control unit detects an error, the system is blocked and sets to "PAUSE":
this means that all the solenoid valves are supplied, while the pump is stopped: this way the hydraulic pistons are locked and the hood stops in the position in which it was. This lasts only 5 minutes (to avoid draining the battery), after which the valves are de-activated, but the led stays on.

In this case it is necessary to release the control button, press it again, or move the key to STOP, then back to MARCIA and press the button again.

Types of detectable errors:

- **sequence performance times too long**: each step of the operating sequences has a maximum available time: upon exceeding this limit the control unit detects an error and flashes the led;
- **input signal not consistent**: as the whole sequence is pre-programmed, the control unit detects an abnormal signal, i.e. unforeseen: for example certain signals must not change during a certain step of the sequence: in this case the control unit detects an error and flashes the led;
- **short circuit on output signals:** any short circuits or overloads on the outputs are detected: in this case it is necessary to move the key to STOP and then back to MARCIA: if the led flashes for 10 seconds and then goes off, the fault persists and it is necessary to carry out the fault-finding procedure using the ALFA ROMEO TESTER.
- **open circuit on output signals:** any open circuits or breaks on the outputs are detected: in this case the control unit detects an error and flashes the led;

POWER WINDOWS

INDEX

WIRING DIAGRAM

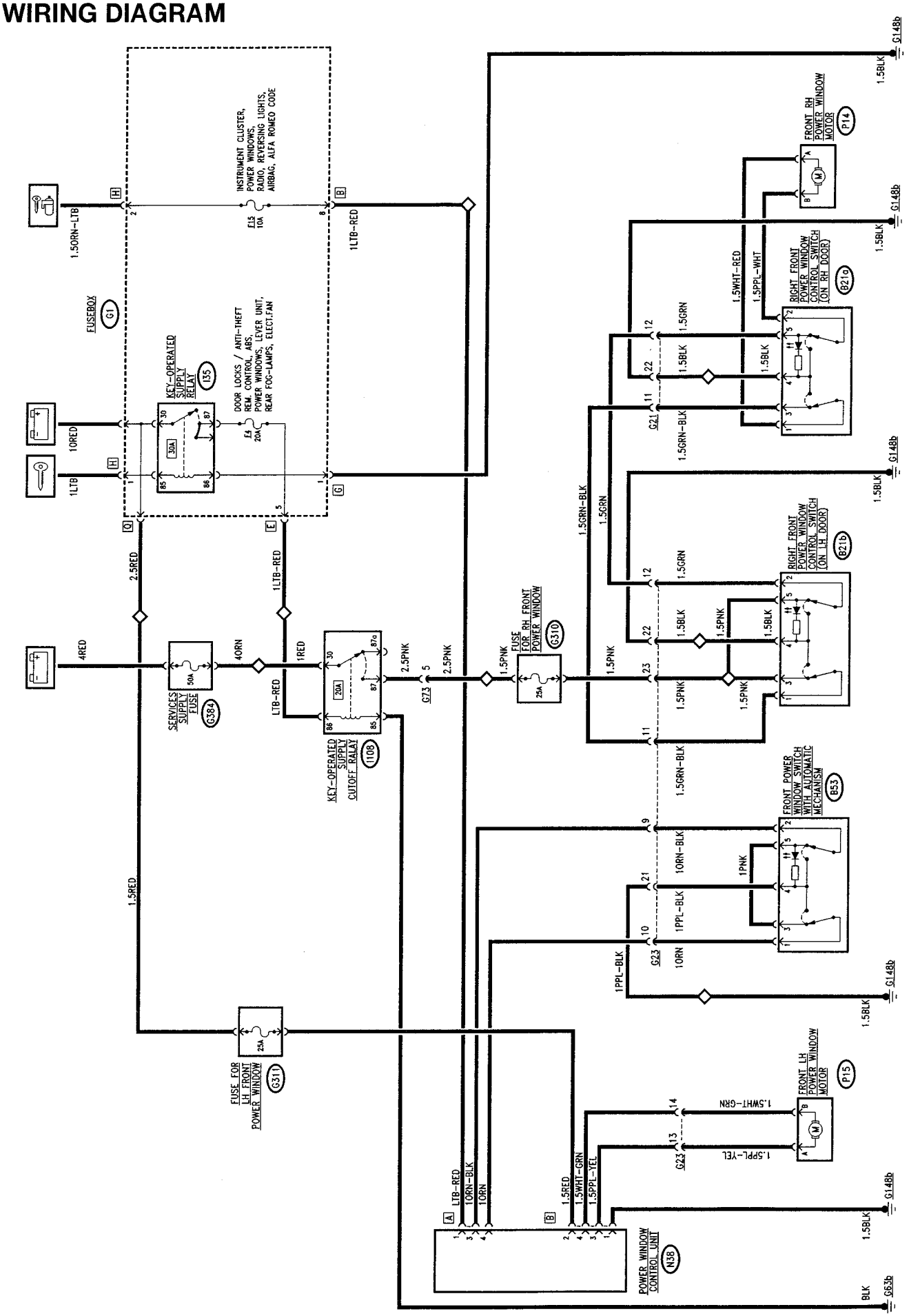

GENERAL DESCRIPTION

The operation of the left electric window (driver's side) is automatic, controlled by a control unit which actuates it according to the following logic:

- pressing the button and keeping it pressed (over 300 ms), the window opens or closes normally until the pushbutton is released;
- a short pulse (below appr. 300 ms.) operates the motor which automatically stops when the stop limit is reached (window open or closed completely);
- an even shorter pulse (less than appr. 50 ms.) is considered by the control unit as an accidental shock and no action will result.

This operating logic takes place through the "key-operated" supply". The electrical mechanism that operates the right front window is of the conventional type: when the button is pressed the window rises or drops; it is fitted with two control switches: one on the right-hand door and one on the left-hand door; in this case, too, operation is only possible with the ignition key engaged.

FUNCTIONAL DESCRIPTION

The power window control unit **38** is supplied at pin 2 of connector B by the battery voltage through wander fuse **G311** near the fusebox.
The "key-operated" consensus signal reaches pin 1 of connector A via fuse **F157** of **G1**.
The control signals for the upward and downard stroke respectively reach pins 4 and 3 of connector A from the left-hand window control switch **B53**.
In fact, this double switch sends an earth to the control unit from the part in which the contact has been closed (pin 1 = up; pin 2 = down).
The operating signals (up or down) leave pins 3 and 4 of connector B of **N38** for the left-hand window motor **P15:** 12 V and earth are inverted to change the direction of rotation
Pin 1 of connector B of **N38** is connected to earth.

Conversely, the operation of the right-hand motor is controlled directly by one of the two switches **B21** (**B21a** located on the right-hand door, **B21b** on the left) which are connected in series.
The "key-operated" supply passes through wander fuse **G310**, also located next to the fusebox. The righthand window motor **P14** is operated by one of the two switches **B21** in one direction or the other depending on the origin of the 12V or earth signal.

LOCATION OF COMPONENTS

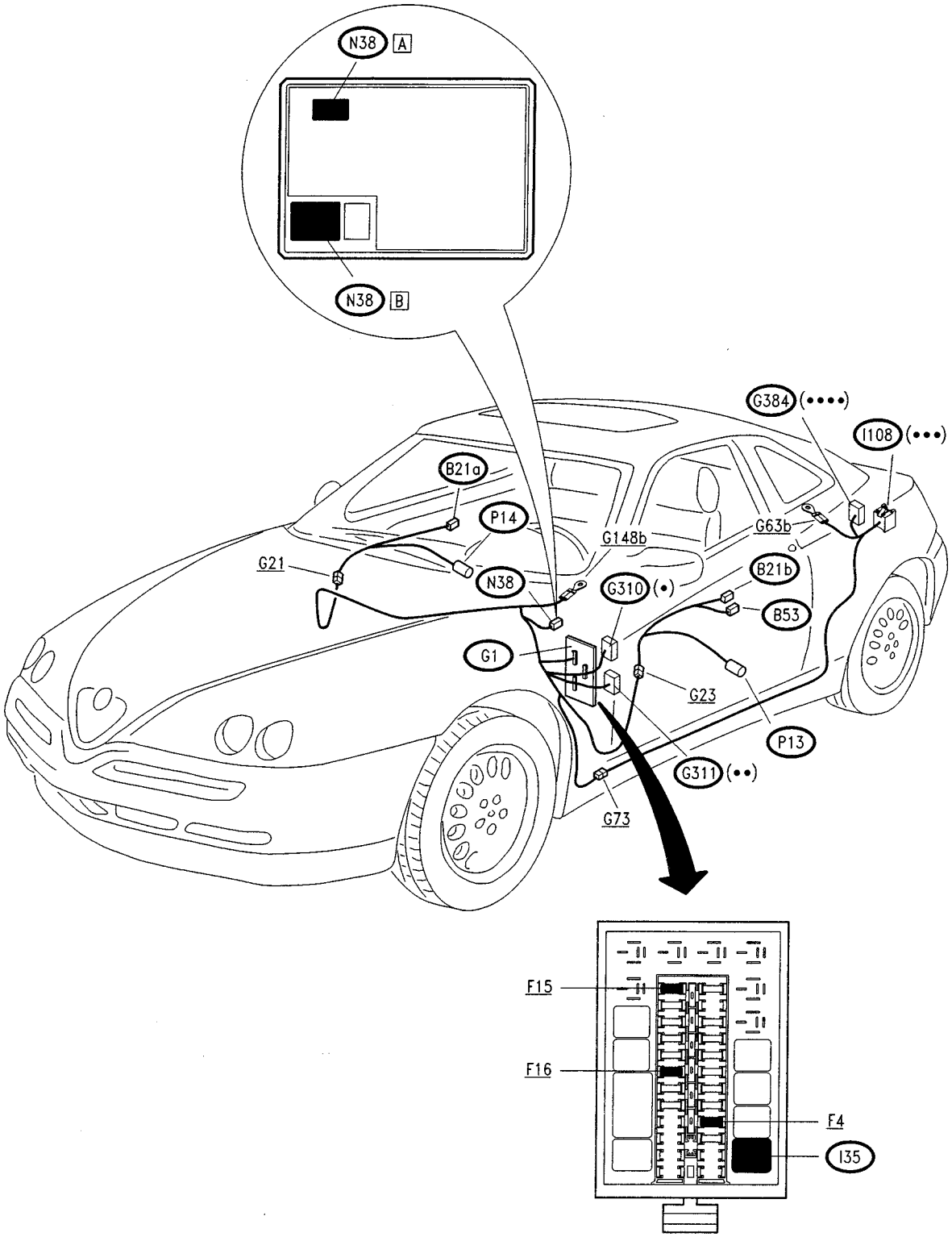

(•) White fuseholder
(••) White fuseholder
(•••) Blue base
(••••) Black fuseholder

FAULT-FINDING TABLE

Fault	Component to be checked								
	G310	G311	F15	P14	P15	N38	B53	B21a	B21b
LH power window, under all circumstances		•	•		•	•	•		
LH power window, automatic operation		•				•			
RH power window	•			•				•	•

CHECKING COMPONENTS

Power window control unit (N38)

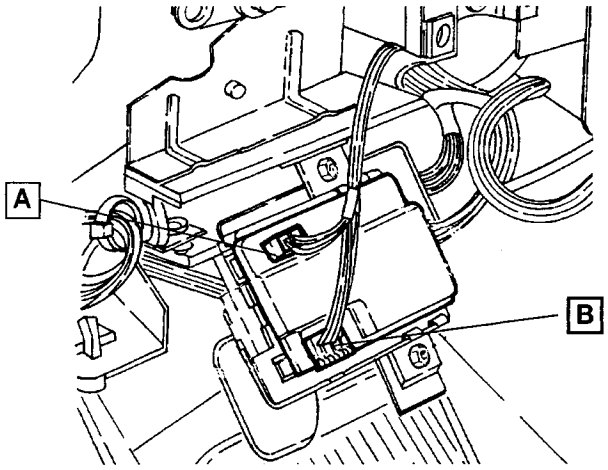

Checking the device: **test A**

Power window switches (B21a) (B21b) (B53)

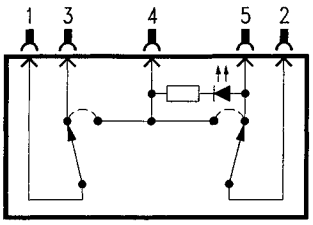

SPECIFICATIONS
Checking operation: **at rest** : continuity between pin 3 and 1 and between pins 2 and 5, a.c. between the other pins operating **up** button: continuity between pins 4 and 1; a.c. between the other pins operation **down** button: continuity between pins 4 and 2; a.c. between the other pins

CHECK POWER WINDOW CONTROL UNIT (N38)	TEST A

Work with the component fitted on its connector, from the cable inlet side

TEST PROCEDURE	RESULT	CORRECTIVE ACTION
A1 CHECK VOLTAGE – Check for 12V between pins 2 and 1 of connector B of **N38**	OK ▶ ~~OK~~ ▶	Carry out **step A2** Check wander fuse **G311**. Restore the wiring between **N38 B** and **G311** and between **N38 B** and earth **G148b**
A2 CHECK VOLTAGE – With the key turned to MARCIA, check for 12V between pin 1 of connector B and pin 1 of connector A of **N38**	OK ▶ ~~OK~~ ▶	Carry out **step A3** Check fuse **F15** of **G1**. Restore the wiring between **N38 A** and **G1**
A3 CHECK MANUAL OPERATION – Operating the switch of the driver's side front window **B53,** check for 12V between pins 3 and 4 of connector B of **N38**; this voltage ceases as the action of the pushbutton ceases	OK ▶ ~~OK~~ ▶	Carry out **step A5** Carry out **step A4**
A4 CHECK MANUAL OPERATION – Operating switch **B53**, check for a voltage of 12V between pins 3 and 4 of connector A of **N38**	OK ▶ ~~OK~~ ▶	Change device **N38** Restore the wiring between **N38 A** and switch **B53**, or change the latter
A5 CHECK AUTOMATIC OPERATION – With the key turned to MARCIA, operating switch **B53** check for: • continuous 12V between pins 3 and 4 of connector B if the button is pressed for less then 300 ms • no voltage if the button is pressed for less than 50 ms • continuous 12V between pins 3 and 4 of connector B keeping the button pressed	OK ▶ ~~OK~~ ▶	DEVICE **N38** NOT WORKING PROPERLY. Check the connections with the other components Change device **N38**

HEATED REARSCREEN AND WING MIRROR DEFROSTING AND ADJUSTMENT

INDEX

WIRING DIAGRAM

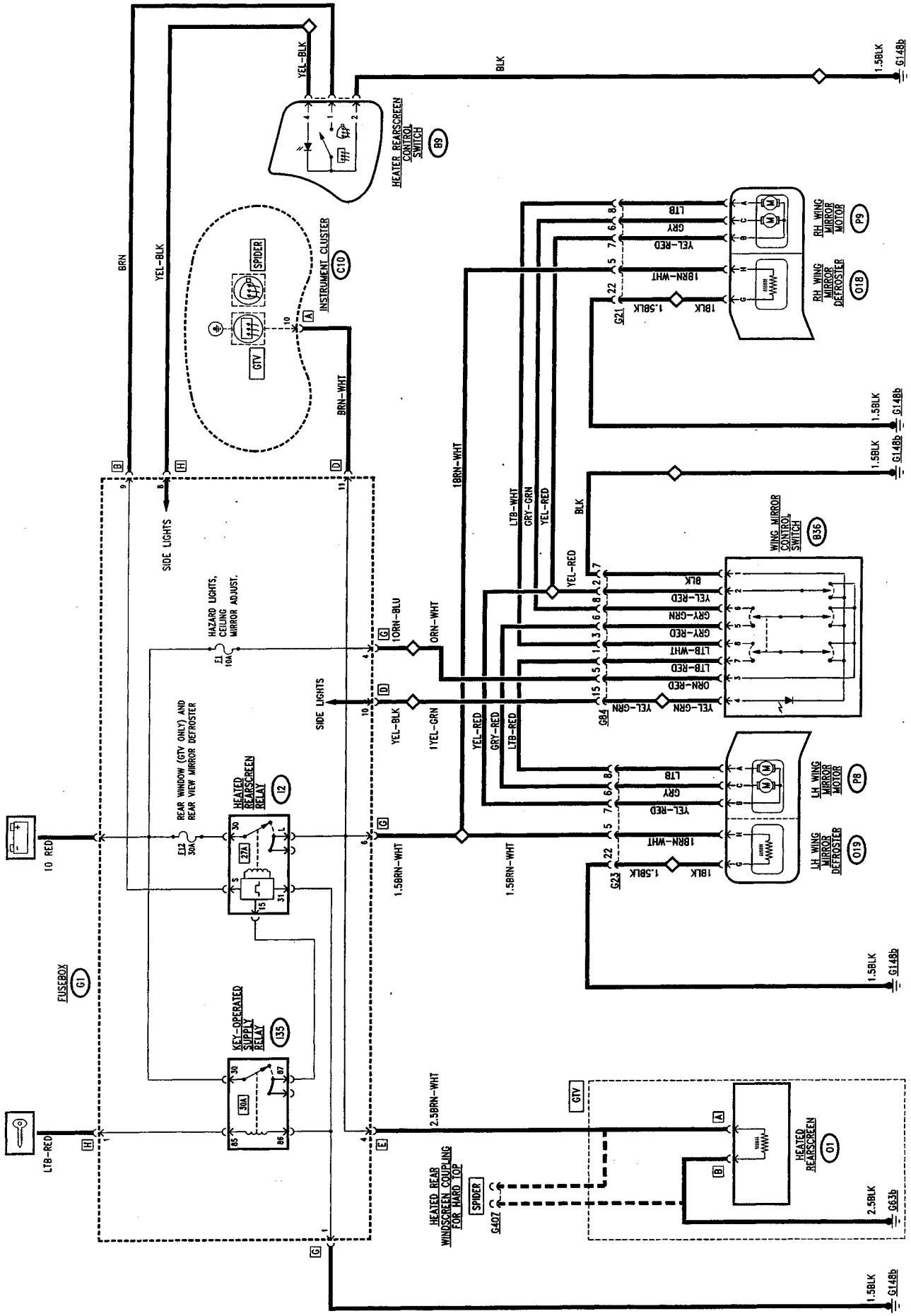

GENERAL DESCRIPTION

Defrosting

The rearscreen **(GTV only)** and wing mirrors incorporate a wire that heats the surfaces it contacts when it is crossed by current, thereby quickly demisting and/or defrosting them.
The device is actuated by pressing the corresponding switch on the panel which controls the heated rearscreen relay.
A warning light on the instrument cluster indicates when the device is operating.

For SPIDERS with a Hard Top, there is a special socket for connecting the rear windscreen incorporated in the actual Hard Top, located on the left panel.

Actuation of the heated rearscreen also turns on the wing mirror defrosting function.

N.B. The ideogram in the switch and on the warning light is different for the GTV which also includes the rearscreen and for the SPIDER which involves the wind mirrors only.

Wing mirror adjustment

The two wing mirrors are adjusted through the switch that operates two electric motors in each of the two mirrors (one motor turns the mirror on a horizontal axis, the other on a vertical axis.

A single switch operates both the left-hand and right-hand mirrors, as a selector makes it possible to switch from one to the other.

FUNCTIONAL DESCRIPTION

Defrosting

The line of fuse **F12** of fusebox **G1** supplies the rearscreen heating relay switch **I2**, the coil of which is supplied from the ignition switch and energized by an earth signal leading from switch **B9** or .
Relay switch **I2** to be found in fusebox **G1**, includes an electronic timing device which turns off the device after 20 minutes from the first time it is turned on and after 10 minutes if it is turned on again.

When the contact of relay switch **I2** closes the battery voltage supplies the line, which reaches the rearscreen heating **O1** (GTV only) and the resistances of the wing mirrors **O19** (left) and **O18** (right).
For SPIDERS, the supply is sent to socket **G407** to which the Hard Top is connected.
The same rearscreen supply signal is also sent to the instrument cluster **C10** to turn on the corresponding warning light.

Wing mirror adjustment

The double switch **B36** controls the two electric mirrors in the mirrors **P8** (left) and **P9** (right).
The switch is supplied with direct voltage - pin 3 - which crosses fuse **F1** of the fusebox **G1**; pin 1 is earthed.
Operating switch **B36** in one direction or in the other one of the motors receives positive and earth, in addition to the shared signal - pin 2, thereby determining the direction of rotation. Depending on the position of the selector, the right-hand motor **P9** (signals from pins 6 and 8 of **B36**) or the left-hand motor **P8** (signals from pins 5 and 7 of **B36**) is connected; the switch is illuminated by a led which is turned on when the sidelights are on (pin 4).

LOCATION OF COMPONENTS

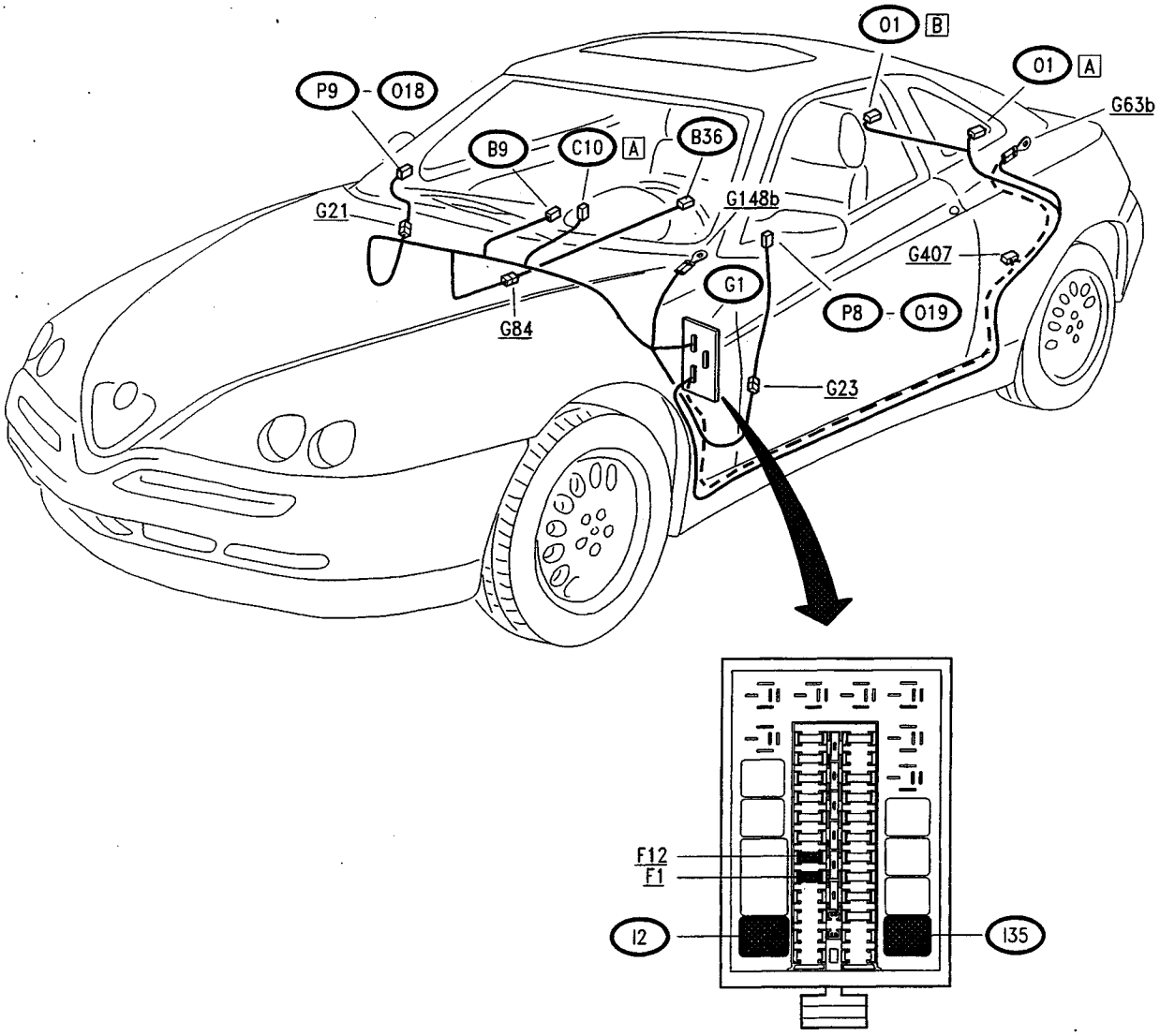

– – – Spider with "Hard Top"

FAULTFINDING TABLE

Failure	Component to be checked										
	E12	I2	B9	O1	O19	O18	C10	E1	P8	P9	B36
Defrosting, under all circumstances	●	●	●								
Rearscreen defrosting (GTV only)				●							
LH wing mirror defrosting					●						
RH wing mirror defrosting						●					
Rearscreen warning light							●				
Wing mirror adjustment, under all circumstances								●			●
LH wing mirror adjustment									●		●
RH wing mirror adjustment										●	●

(1) The instrument cluster **C10** cannot be repaired. Therefore, in the event of a failure it is not possible to change the single warning light and a new, complete cluster must be fitted.

CHECKING COMPONENTS

Heated rearscreen relay (I2)

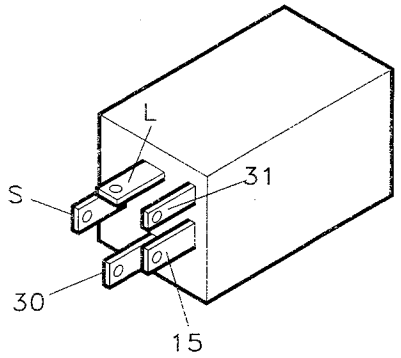

check device: see **test A**

Wing mirror (O18-P9) (O19-P8)

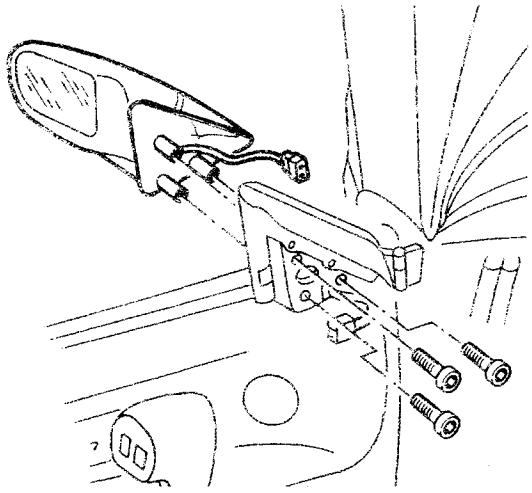

SPECIFICATIONS	
Defrosting resistance (between pins G and H of the connector)	10 Ω

SPECIFICATIONS	
rotation upwards	12V at pin C, earth at pin B
rotation downwards	12V at pin B, earth at pin C
rotation rightwards	12V at pin B, earth at pin A
rotation leftwards	12V at pin A, earth at pin B

Double wing mirror control switch (B36)

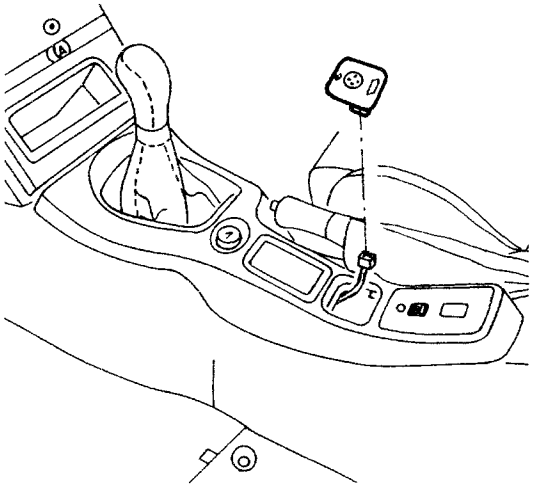

Checking the device: see **test B**

CHECK REARSCREEN RELAY (I2)	TEST A

TEST PROCEDURE	RESULT	CORRECTIVE ACTION
A1 CHECK VOLTAGE – Disconnect device **I2** and check on the base of fusebox **G1** for: 12V between pins 30 and 31. With the key at MARCIA: check for 12V between pins 15 and 31	OK ▶ ~~OK~~ ▶	Carry out **step A2** Check fuse **F12** of **G1**. If necessary check relay **I35**
A2 CHECK CONTROL SIGNAL – Insert rearscreen defrosting: check earth at pin S of I2	OK ▶ ~~OK~~ ▶	Insert device **I2** on the base of **G1** and continue with **step A3** Restore the wiring between **G1** and switch **B9**
A3 CHECK DEFROSTING CONTROL – Insert rearscreen defrosting: check 12V between pin 1 and 6 of connector G of **G1**: this voltage disappears after 20 minutes	OK ▶ ~~OK~~ ▶	DEVICE **I2** WORKS PROPERLY. Check other components. Replace relay **I2**

CHECKING DOUBLE WING MIRROR CONTROL SWITCH (B36)	TEST B

TEST PROCEDURE	RESULT	CORRECTIVE ACTION
B1 CHECK VOLTAGE – Check for 12V between pins 1 and 3 of **B36**	OK ▶ ~~OK~~ ▶	Carry out **step B2** Check fuse **F15** (15A). Restore the wiring between **B36** and fusebox **G1** and earth **G148b**.
B2 CHECK VOLTAGE – With the side lights on, check for 12V at pin 4 of **B36**	OK ▶ ~~OK~~ ▶	Carry out **step B3** Check that the side lights are working properly; also check the wiring between **B36** and **G1**
B3 CHECK VOLTAGE – Set the selector to the position for operating the **left** mirror and check: - 12V between pins A and B of mirror **P9** moving the switch rightward and leftward - 12V between pins B and C of mirror **P9** moving the switch upwards and downwards In the same way, moving the **right** mirror check: - 12V between pins A and B of mirror **P8** moving the switch leftward and rightward - 12V between pins B and C of mirror **P8** moving the switch upward and downward	OK ▶ ~~OK~~ ▶	THE SWITCH IS WORKING CORRECTLY. Check the connection with the other components Carry out **step B4**
B4 CHECK VOLTAGE – Set the selector to the position for operating the **left** mirror and check on **B36** for: - 12V between pins 7 and 2 moving the switch leftward and rightward - 12V between pins 5 and 2 moving the switch upward and downward In the same way, operating the **right** mirror check for: - 12V between pins 8 and 2 moving the switch leftward and rightward - 12V between pins 6 and 2 moving the switch upward and downward	OK ▶ ~~OK~~ ▶	Restore the wiring between **B36** and **P9** (RH) or **P8** (LH), or change one of the two motors Change switch **B36**

HEADLAMP AIMING DEVICE

INDEX

WIRING DIAGRAM

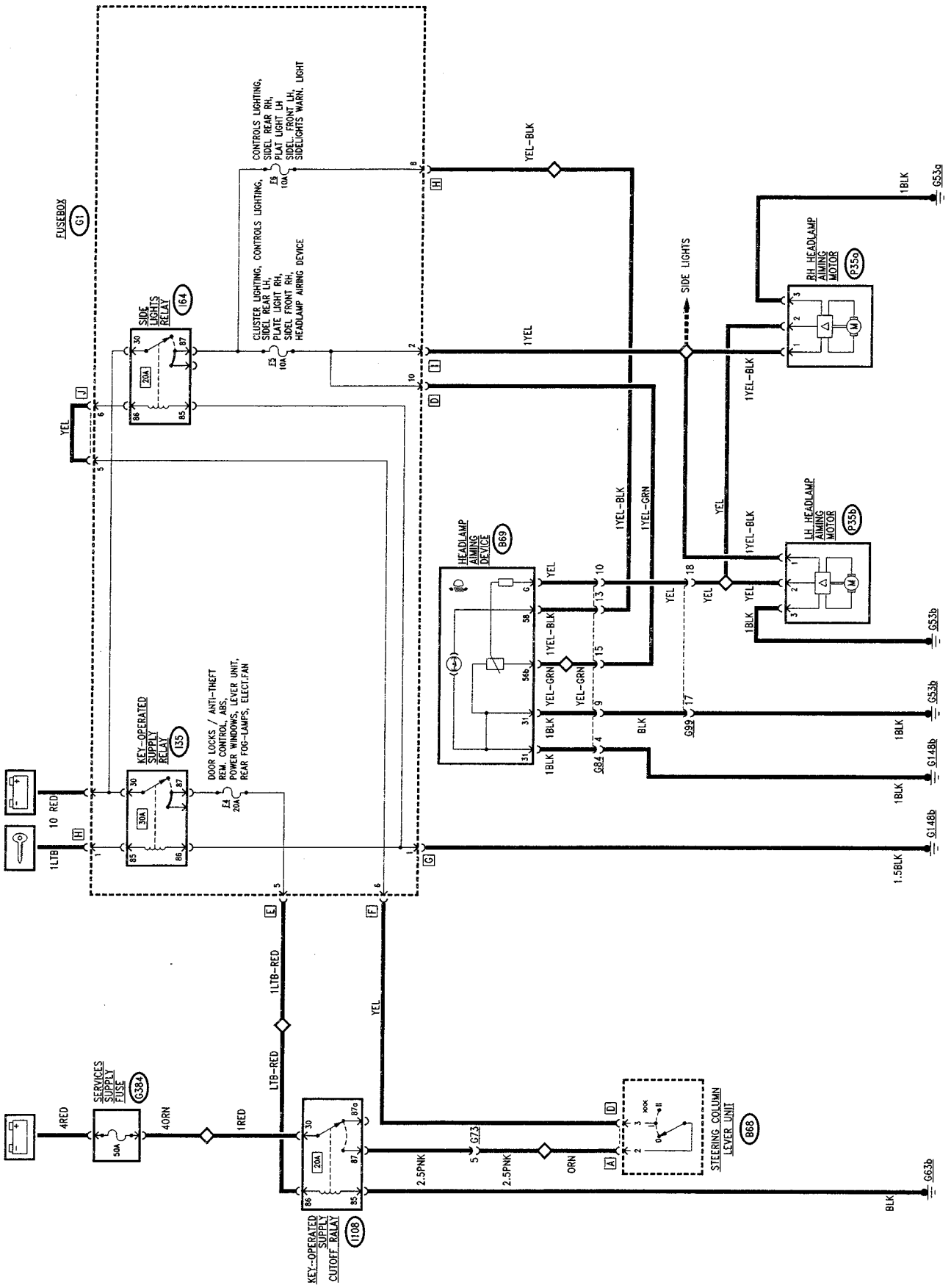

GENERAL DESCRIPTION

The car offers the possibility to adjust the headlight beam in relation to the load directly from the driver's seat.
In this way the problem or invonveniences caused by incorrect headlamp aiming is avoided and the delicate task of direct lamp adjustment is simplified (this is not substituted by the electrical device but integrated with it).

The adjustment device consists of a motor fitted on each of the two headlamps which suitably slopes them to lower the beam when the car is heavily loaded and raise it when the load is lightened.
The driver operates the system directly by turning a knob on the the centre console, which allows four positions to be chosen according to the following table:

Position of knob	Load conditions
0	driver only or driver and passenger on front seat
1	all seats occupied
2	all seats occupied plus load in luggage compartment (until reaching max.allowed load on rear axle)
3	driver plus load in luggage compartment until reaching max. allowed load on rear axle)

The system can be operated only when the side lights are on; it is completely de-activated when they are off.

NOTE: for safety reasons the system is designed so that in the event of a failure it cannot be moved to a higher position than the one it is already at.

FUNCTIONAL DESCRIPTION

The headlamp aiming device **B69** is supplied at pin 56b by a line leading from the side lights circuit from fuse **F5**: this line receives voltage only when the side lights are on.
The same supply (pin 58) turns on the led inside device **B69** itself which illuminates the ideogram identifying the function.
Pins 31 of device **B69** are earthed, while the adjustment signal obtained by pressing the four-position selection knob leads from pin G. This signal varies the output voltage through a potentiometer (100% voltage at position "0"; with voltage decreasing for the successive positions).

Motors **P35a** and **P35b** are formed by a motor in the strict sense of the word controlled by a transducer and an electronic control unit which establishes the stroke on the basis of the voltage of the adjustment signal reaching pins 2, from device **B69**.
The devices are supplied at pins 1, by the same line as fuse **F5**, while pins 3 are earthed.

LOCATION OF COMPONENTS

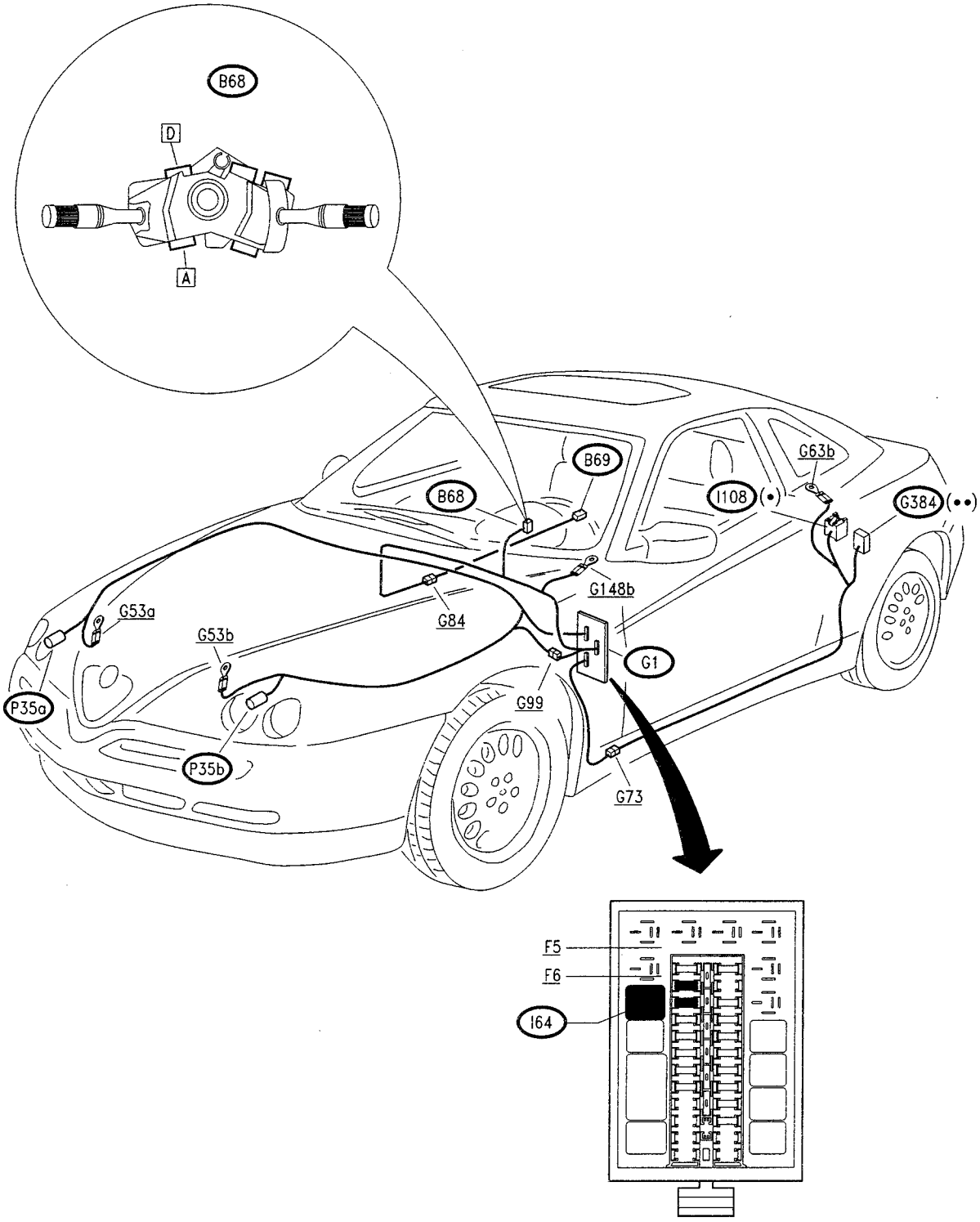

(•) Blue base
(••) Black fuseholder

FAULTFINDING TABLE

Failure	Component to be checked				
	F5	F6	P35a	P35b	B69
Complete adjustment	•				•
RH headlamp aiming device			•		
LH headlamp aiming device				•	
Control device lighting		•			•

CHECKING COMPONENTS

RH/LH hedlamp adjustment motor (P35a) (P35b)

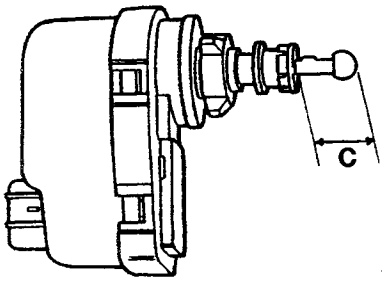

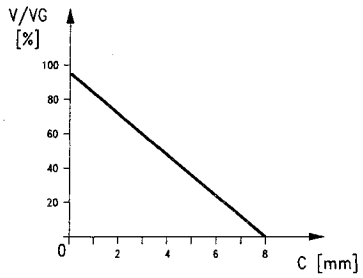

Operating diagram: course of stroke C in relation to the voltage V/VG

V = voltage between pin 56b and pin 31 (12V)

VG = voltage between pin G and pin 31

Headlamp aiming device (B69)

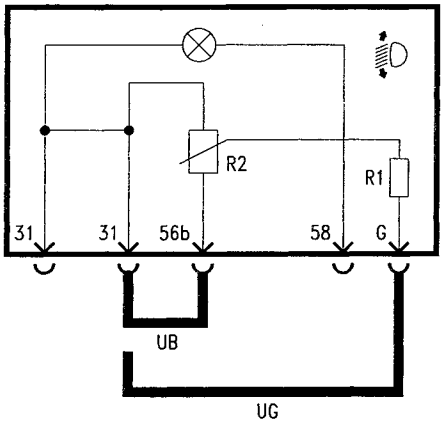

SPECIFICATIONS	
R1	390 Ω ± 2%
R2	4.7 kΩ

Knob position	Voltage between terminals G and 31 (UG)
0	94.9% UB ± 3%
1	88.3% UB ± 7%
2	82.7% UB ± 7%
3	75.1% UB ± 7%
4	51.2% UB ± 7%

(UB: voltage between pins 31 and 56b = 12V)

TOWING ARRANGEMENT

INDEX

WIRING DIAGRAM

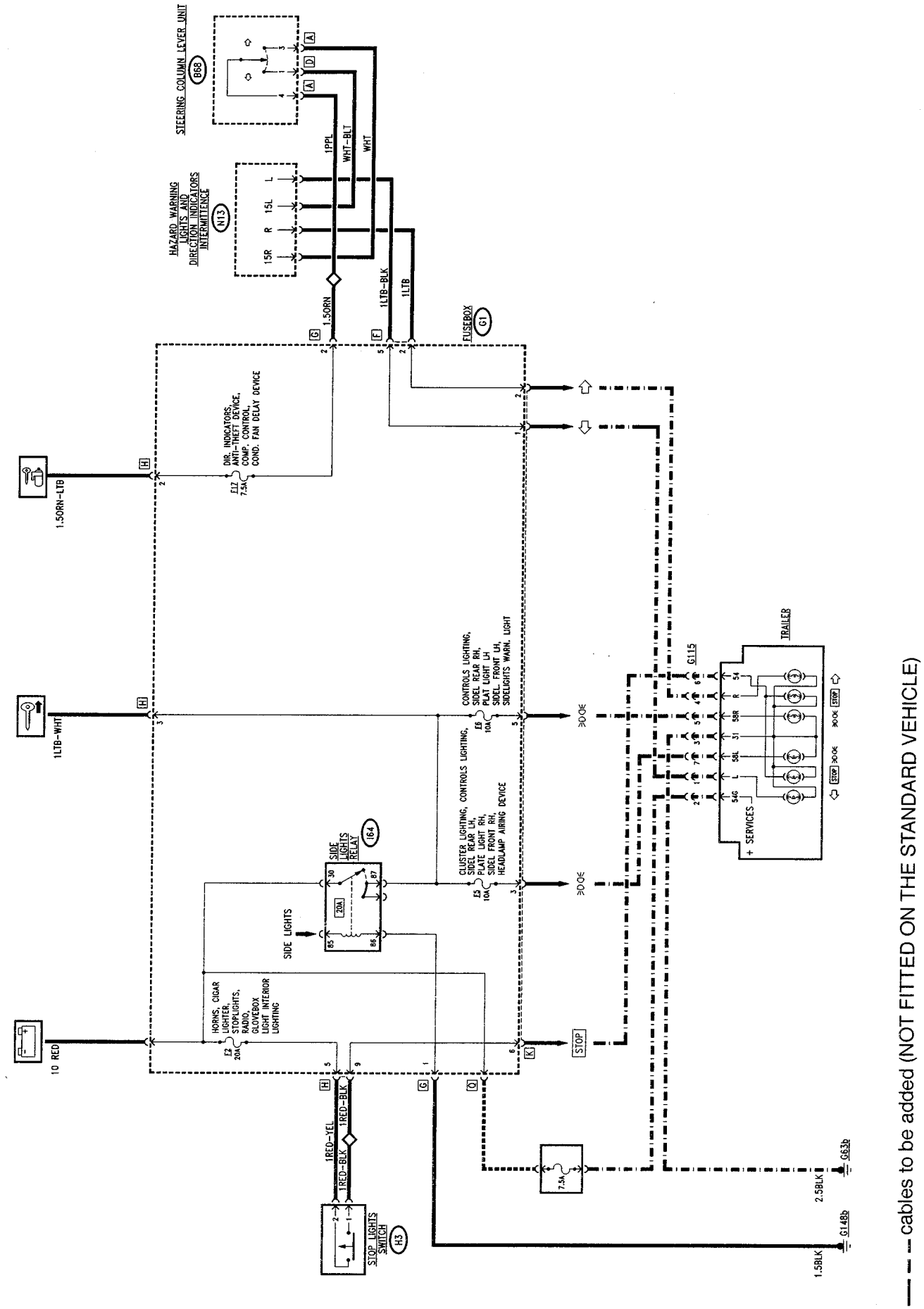

— — — cables to be added (NOT FITTED ON THE STANDARD VEHICLE)

GENERAL DESCRIPTION

The fusebox **G1** is fitted with a special connector (**connector K**) provided with all the lines needed for connecting the trailer. Following the indications of the wiring diagram, connect this connector with the socket for the tow hook **G115** which is then connected with the standardized connector on the trailer.

WARNINGS:
For connection with the trailer a 7-pole 12V connector must be used according to CUNA - UNI 9128 Standards.

The socket must then be connected with a direct supply - in this case protect the line with a special fuse - and with an earth.

When making the connections on the car adhere to the following precautions:

- avoid interferences between electrical cables and the exhaust pipe
- protect any holes for passing the cables with appropriate grommets;
- connect the car earth with the trailer earth through the 7-pole connector using a 2.5 sq.mm cable.
- replace the direction indicator electronic intermittent device **N13** with one of higher capacity, to withstand the additional load of two 21W bulbs.

With the exception of the regulation warning devices - and an electric brake that must be directly supplied from the battery, using a cable of no less than 2.5 sq.mm and a 30A fuse - **it is prohibited to connect the services installed on the trailer to the car's electric system** (fan, fridge, interior lighting, etc.), with the exception of a light bulb with a power rating of no more than 15W.

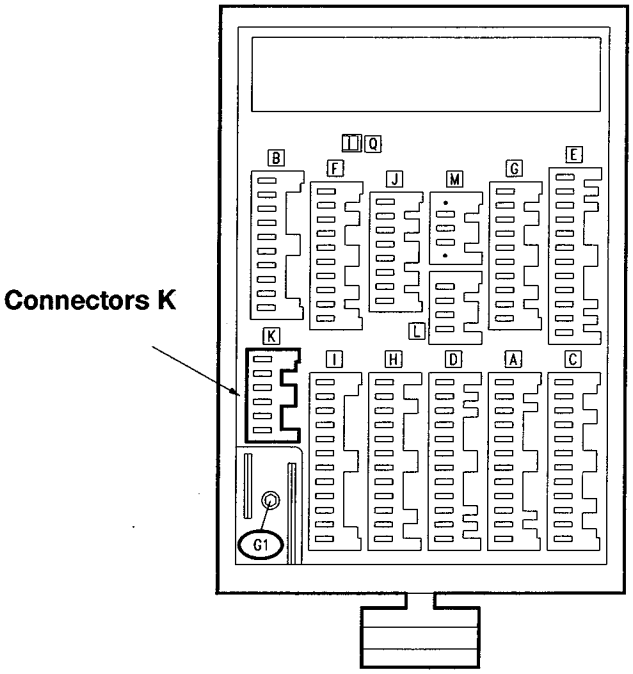

SAFETY SYSTEM AIR BAG AND PRETENSIONERS

INDEX

SAFETY SYSTEM AIR BAG AND PRETENSIONERS

This car is fitted with an electronic safety system which, in the event of an impact, operates one or two Air Bags and two safety belt pretensioners.

The **AIR BAG** is a passive safety device formed of one or two cushions which automatically inflate between the body of the occupants of the front seats of the vehicle and the front structures of the passenger compartment, in the event of a head- on crash.

The safety belts **PRETENSIONER** is a pyrotechnic device integrated in the safety belt buckle, which operates in the event of a head-on collision taking up the inevitable slack in the belts caused by the action of the weight of the body or its adherence to the seat back.

The system as a whole comprises the following components:

1. Electronic control unit.
2 .Driver's side Air Bag module.
3. Passenger's side Air Bag Module.
4. Safety belt pretensioners.
5. Warning light on the instrument cluster that indicates any faults and the diagnosis code
6. Connector for the ALFA TESTER.

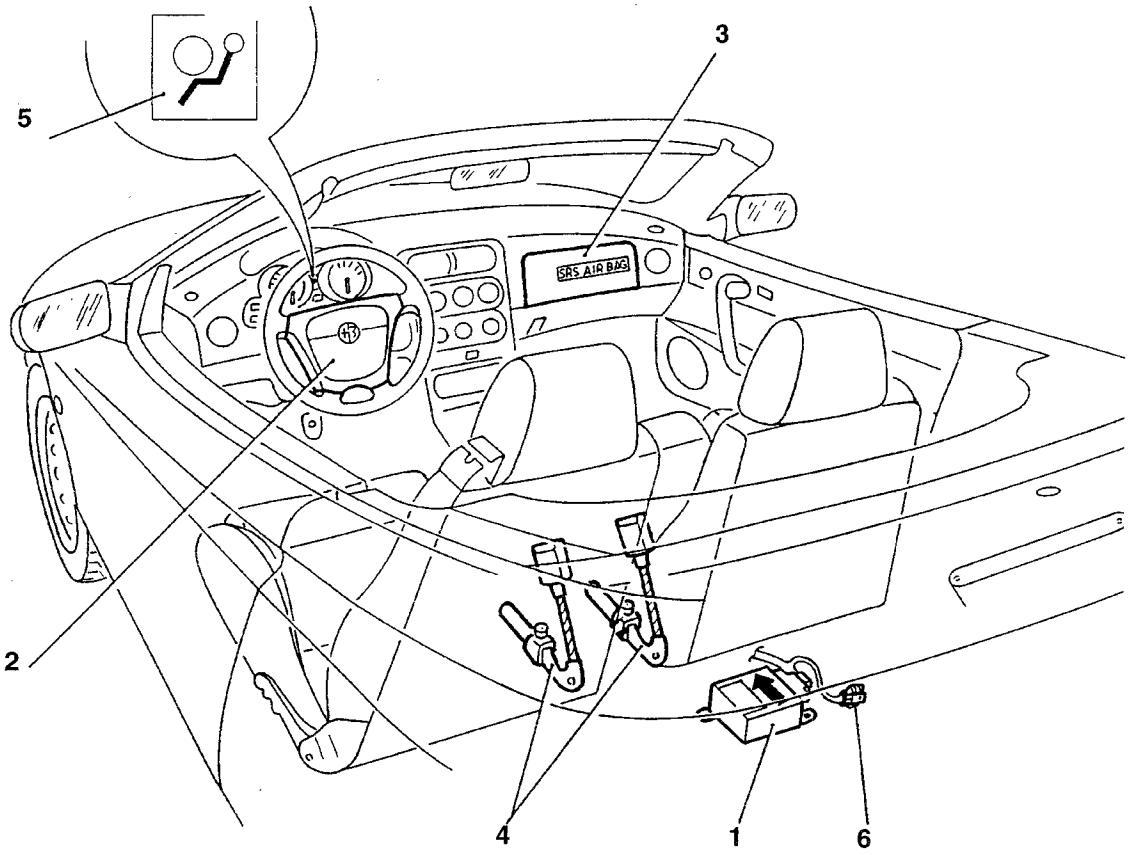

The electronic control unit is equipped with suitably calibrated deceleration sensors, through which it detects a collision situation and triggers the reaction of a chemical compound which produces nitrogen through two electric detonators. The gas inflates the two synthetic fibre cushions respectively housed at the centre of the steering wheel and in a compartment of the dashboard in front of the passenger.

Simultaneously, the control unit triggers the pretensioners which prevent the belts from unreeling by a piston operated by a gas generator which pulls the steel cable fastening the buckle.

SAFETY RULES TO BE FOLLOWED FOR OPERATIONS ON CARS FITTED WITH AIR BAG SYSTEM

Below we are giving some rules which MUST BE STRICTLY ADHERED TO during any type of operation concerning vehicles fitted with Air Bag safety systems.

PRELIMINARY RULES

You are reminded that Air Bag modules should be handled with care. The use, transport and storage of them are ruled by the following procedures for handling these components.

- Before starting to carry out:
  - body repair work;
  - welding operations;
  - work requiring the removal of Air Bag modules or the control unit.
- Remove the key from the ignition switch
- Always disconnect the battery, i.e.: disconnect the two terminals from their posts and isolate them taping carefully.
- Disconnect the control unit connector waiting at least 10 minutes after disconnecting the battery.
- When removing one of the inflating devices, closely follow the procedure given below:

1. Wait for at least 10 minutes after disconnecting the battery before starting to disassemble the module.
2. Slacken the fastening screws.
3. Disconnect the coupling of the inflation devices
4. Store the devices with the cover upwards in a key-locked metal cabinet. This cabinet, to be used only for this purpose, must never be used for storing any other type of material, especially if inflammable. The cabinet must possess all the requisites foreseen for containing pyrotechnical charges (shockproof metal cabinet with air vents to allow natural ventilation inside) and it must be labelled according to the laws in force (DANGER EXPLOSIVES - USE OF NAKED FLAMES PROHIBITED - DO NOT OPEN UNLESS DULY AUTHORISED).

- All the connectors used and wired on Air Bag modules contain a short circuit clip, until the moment in which the Air Bag modules are connected to a suitable power source through the appropriate connector there is no possibility of unduly activating the units.

A component of the system that was not activated during an accident is to be considered still "active" therefore unexploded components due to faults or guarantee expiry or other causes which make their replacement necessary must be returned to the special centre following the procedure described below

Assembly and disassembly of components of the safety system must be carried out SOLELY by competent, authorised technical staff.
The failure to abide by the instructions herein may involve undesired activation of the system, personal injury or unneccessary system repairs.
IT IS STRICTLY PROHIBITED TO DISASSEMBLE THE COMPONENTS OF AIR BAG MODULES.

All the system components have been designed specifically to work on a car of specific make and model, therefore Air Bags cannot be adapted, re-used or installed on other vehicles, but only on those for which they were designed and produced.

Any attempt to re-use, adapt or install an Air Bag on a different model may cause serious or lethal harm to the occupants of the vehicle in the event of an accident.

Changing the Air Bag (owing to a fault or expiry of the terms of guarantee)

When replacing an Air Bag module due to a fault or expiry of the terms of guarantee it is necessary to:

1. Remove the sticker label from the new module, stick it in the special file with the vehicle data (chassis no., date of registration, model, etc.) and add the serial number of the old module. The file with the recorded data must be kept for any inspections over time.
2. Before glueing the label it should be perforated in correspondence with the month and the ten years following the year in which the module is fitted (e.g. 1996 will correspond to 2006).
3. Connect the module to the special connector.
4. Fit the Air Bag module in its housing checking the correct arrangement of the connection cable and fasten the screws to the specified torque.

Control unit replacement

The electronic control unit must ALWAYS be replaced in the event of a crash involving activation of the complete system (Air Bag and pretensioners)

⚠ Never attempt to re-use the electronic control unit.

Also when replacing the control unit it is necessary to stick the label in the file mentioned previously.

After working on the system it must be checked using the ALFA ROMEO Tester.

OPERATIONS AFTER AN ACCIDENT

Should any component of the safety system be damaged after an accident, it MUST be replaced.

Do not attempt to repair the control unit, clock spring contact and Air Bag modules.

ACCIDENTS WITH OR WITHOUT AIR BAG ACTIVATION

Some system components should be inspected whether the system has been activated or NOT. These components are:

- Steering column;
- Steering column supports;
- Control unit and modules anchorage area;
- Clock spring contact;
- Dashboard (in the area of the passenger's Air Bag).

The presence of distortion, breaks and flexing necessarily involves replacement of the component.

ACCIDENTS WITH ACTIVATION OF AIR BAGS

Some system components must be replaced if the car has suffered a head-on crash involving total or partial system activation

In the event of partial activation (only pretensioners), these components are:

- Pretensioners
- Electronic control unit (only after the third activation of the pretensioners)

In the event of total activation (Air Bag and pretensioners), these components are:

- Air Bag modules
- Pretensioners
- Electronic control unit.

As far as the wiring and connectors are concerned, these should be checked for any signs of burns, melting of the outer insulation or damage due to excessive heat.

Any signs of damage on the clock spring contact and electronic control unit and Air Bag module anchorage areas necessarily involve replacement of the damaged components.

Painting work

There are no particular safety instructions to be followed for painting work followed by oven drying since the modules have been designed in such a way that heating the outside surfaces of the car using normal paint drying systems will not damage them.

⚠ The use of naked flames near modules is prohibited.
All the electronic control units (including the one for the Air Bag system) should in any case be removed if their temperature in certain environments may reach or exceed 85°C.

HEALTH HAZARDS

The precautions to be taken when handling activated Air Bags are the following:

- wear protective polyethylene gloves and safety glasses;
- after touching triggered Air Bags, wash your hands and any exposed parts of the body with soap and water.

Effects of over exposure

There is no potential harm in exposure to the propellent as the system is completely sealed.

The mixture of propellents is in the solid state, therefore inhalation is impossible also in the case of breakage of the gas generator cartridge.

Should any gas leak, there is no danger for human health.

At all events avoid contact with the skin and do not swallow the propellent.

- Contact with the skin: wash immediately with soap and water.
- Contact with the eyes: Wash the eyes immediately under running water for at least 15 minutes.

- Inhalation: take the person involved outdoors immediately.
- Swallowing: induce vomit if the person is conscious.

Under all these circumstances always call a doctor.

SAFETY RULES FOR HANDLING AIR BAG MODULES

Under normal conditions the driver's and passenger's Air Bag are activated by the action of an electronic ignition device during the crash. The gas developed under these conditions is harmless.

Personnel carrying out operations on the device fitted on the car must strictly adhere to the following rules of safety.

Personnel working on the devices must be appropriately trained.

- During open (exploded) Air Bag removing and replacement operations handle only one module at a time and when removing wear gloves and glasses.
- Always rest the Air Bag module with the opening lid and the pre-breakage groove upwards. Never place anything above this lid.
- At the end of operations always wash the hands carefully with neutral soap and in the event of contact of residual powder with the eyes rinse immediatly with plenty of running water.
- In all versions with Air Bag it is prohibited to work from the front seats without firstly rendering the system inoperational by disconnecting the two battery cables and waiting for 10 minutes.
- The metal components of an Air Bag that has just exploded are very hot. Avoid touching these components for 20 minutes from the time in which the Air Bag was activated.
- Do not power the Air Bag module with electricity unless as specified for installation and servicing.
- Do not carry out repairs on Air Bag modules. Send all faulty modules to the manufacturer. - Do not subject the Air Bag module to heat for example by welding, hammering, drilling, mechanical machining, etc.
- Never install on cars Air Bag units that have fallen or reveal signs of any type of damage whatsoever.
- It is prohibited to keep Air Bag modules together with inflammable materials or fuel.
- The gas generators must not come into contact with acids, greases and heavy metals: contact with these substances may cause the formation of poisonous, harmful gas or explosive compounds.

Any storage of spare parts must be carried out in the original packing and temporary storage should follow the same procedure as an Air Bag removed from the car and not activated, i.e. in any case a key-locked metal cabinet specially for this purpose must be used (shockproof metal cabinet with vents to allow natural ventilation inside).
The cabinet must have warning notices (DANGER EXPLOSIVES - DO NOT USE NAKED FLAMES - ONLY TO BE OPENED BY AUTHORISED PERSONNEL).

SCRAPPING AIR BAG MODULES

Air Bag modules fitted on the car must not be scrapped with the vehicle, they must be removed.

Air Bag units must be deployed before scrapping.

If an Air Bag module has not been deployed during a crash the device is to be considered still charged. All unexploded material MUST NOT BE DEPLOYED, it should be sent to a specialised centre - for ITALY to GECMA, Chivasso - stating "AIR BAG CONTAINING PYROTECHNICAL CHARGE TO BE DEPLOYED" on the delivery note.

For FOREIGN MARKETS, observe current local laws.

The devices must be shipped in the wrapping/packing with which the spare parts were received and if this is no longer available it is possible to ask the Spares Division for the packing only.

Of course, when replacing Air Bag devices, the original packing should be kept intact to be able to return the undeployed device.

WARNING: The failure to follow the procedures listed here may cause undue triggering of Air Bag units and personal injury. Undeployed Air Bag units must NOT be disposed of through the usual refuse disposal channels. Undeployed Air Bag units contain harmful substances for the health which may cause personal injury if the sealed container containing them is damaged during disposal. Disposal of Air Bag units without following this procedure may infringe current laws on the subject.

Ordering procedure

In the case of need, the devices are to be requested individually from Direzione Post-vendita Ricambi-Volvera only through the "depannage" procedure as the Network must not keep these parts in stock. At all events, for in-house handling an in-out register should be kept recording the unit serial numbers and vehicle data (chassis no., date of registration, model, etc.)

CONTROL UNIT (BECKER) - up to chassis n°6016878

The electronic control unit (1) is located in the rear centre section of the car and is rigidly fastened to the floor.

It is fitted with a 10-pin connector (2) used for connection to the electric system.
It is supplied with 12V when the ignition key is in the MARCIA position. However, it still functions for appr. 100 msec after the power is cut off, thereby ensuring operation in an accident which cuts the power off; this is possible due to a buffer condenser within its circuits, which accumulates electrical energy.

This way operation of the Air Bag is guaranteed if the accident causes a fall in the system voltage (eg. battery damage or breakage, supply cables cut off. etc.).

The control unit must be directed with the arrow (3), printed on the sticker pointed in the direction of travel of the vehicle.

This position must always be closely adhered to, since it determines the direction in which the acceleration sensor receives the negative acceleration values to determine a collision situation and trigger the system:

The ECU is equipped with an accelerometer sensor. The sensor signal is processed by a microprocessor and detects the severity of an impact. The ECU, consequently, triggers the pretensioners and the airbags. A second safety sensor enables airbag triggering.

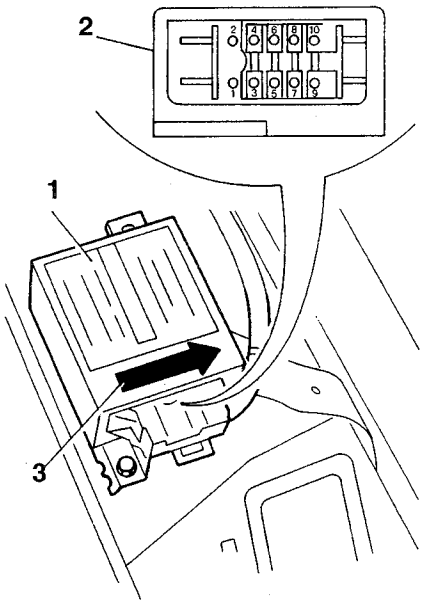

CONTROL UNIT PIN-OUTS

1. Pretensioner activation circuit (+)
2. Modules activation circuit (+)
3. Warning light signal (and diagnosis connector)
4. Diagnosis connector signal
5. Activation (-) of passenger's module
6. Activation (-) of steering wheel module
7. Activation (-) of RH pretensioner
8. Earth
9. Key-operated supply
10. Activation (-) of LH pretensioner

CONTROL UNIT (TRW) - from chassis n°6016879 -

The electronic control unit (1) is located in the centre rear of the car, and it is fastened rigidly to the floor.

It has a 10 pin connector (2) used for connection to the electric system.
It is supplied at 12 V with the ignition key at MARCIA. Activation of the Air Bags is still ensured for appr. 100 msec after a power failure due to a crash; this has been made possible due to a buffer condenser contained in the circuits which accumulates electricity.

This guarantees operation of the Air Bag also in the event of a crash causing a lowering of the voltage in the system (eg. battery damage or breakage, supply cables cut off, etc.).

The control unit must be directed with the arrow (3), stamped on the sticker, in the direction of TRAVEL of the vehicle.

This is absolutely necessary, because it determines the direction in which the acceleration sensor reads the negative acceleration value to define the crash condition and thus operate the system.

The ECU is equipped with an accelerometer sensor. The sensor signal is processed by a microprocessor

and detects the severity of an impact. The ECU, consequently, triggers the pretensioners and the airbags. A second safety sensor enables airbag triggering.

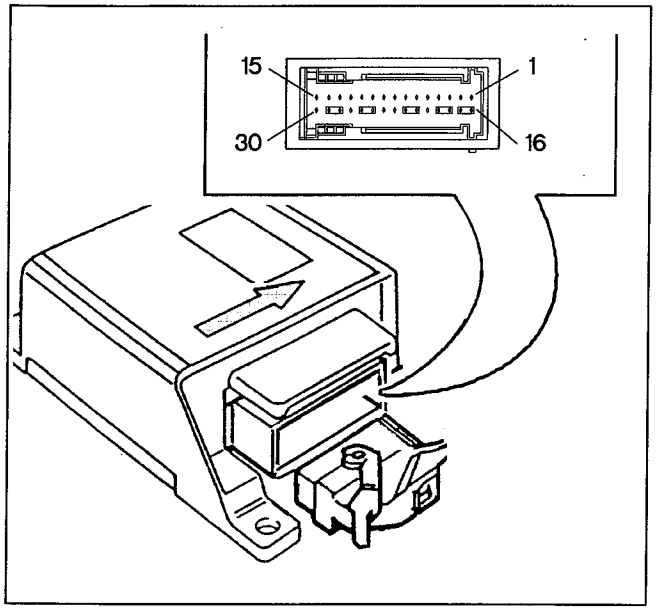

CONTROL UNIT PIN-OUT

1. Driver's Air Bag (-)
2. Driver's Air Bag (+)
3. Passenger's Air Bag (-)
4. Passenger's Air Bag (+)
5. N.C.
6. Passenger's pretensioner (+)
7. Passenger's pretensioner (-)
8. Line L for Tester
9. Line K for Tester
10. Driver's pretensioner (+)
11. Driver's pretensioner (-)
12. N.C.
13. Warning light (fault and diagnosis)
14. Control unit earth
15. Control unit supply (+15)
16. Bridge for driver's Air Bag (-)
17. Bridge for driver's Air Bag (+)
18. Bridge for passenger's Air Bag (-)
19. Bridge for passenger's Air Bag (+)
20. N.C.
21. Bridge for passenger's pretensioner (+)
22. Bridge for passenger's pretensioner (-)
23. N.C.
24. N.C.
25. Bridge for driver's pretensioner (+)
26. Bridge for driver's pretensioner (-)
27. N.C.
28. Bridge for warning light
29. Bridge for control unit earth
30. N.C.

Failure memory

While the vehicle is running, the ECU carries out a continuous system test, checking the continuity in the circuits and the components. All identified faults are memorised and the "Airbag failure" warning light simultaneously lights up on the instrument panel. The failure memory can be consulted during Servicing by connecting a diagnostic tool to the built-in diagnostic socket (refer to following specifications).

Impact memory

As stated, the ECU microprocessor applies complex control and calculation algorithms to the accelerometer sensor signal and identifies the level of severity of an impact. According to the level of severity and when enabled by the safety sensor, the ECU sends a trigger signal to the pretensioners and to the airbags. The trigger sequence is memorised in a specific impact memory containing the information regarding trigger thresholds and safety sensor enables.

Air Bag fault warning light

The Air Bag warning light located in the instrument cluster of the car is powered when the ignition switch is turned to the MARCIA position and it earthed via the electronic control unit.

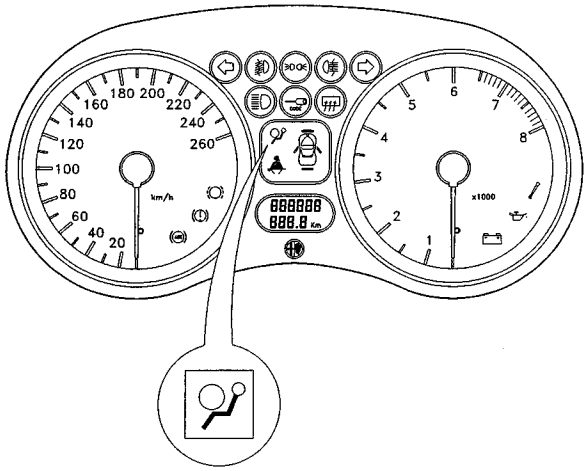

It lights up for about 4 seconds when the vehicle is started (initial test phase).

If the light does NOT light or does NOT go out after 4 seconds, then there is a fault in the Air Bag system.

If the electronic control unit detects a fault during self-diagnosis tests it will immediately light up the Air Bag warning light.

Once a fault has been signalled, the warning light will remain on until the fault has been repaired and cancelled in the fault memory.

PAGE 9

TO PAGE 12

ANNULLED

WIRING DIAGRAM (BECKER control unit - up to chassis no.6016878)

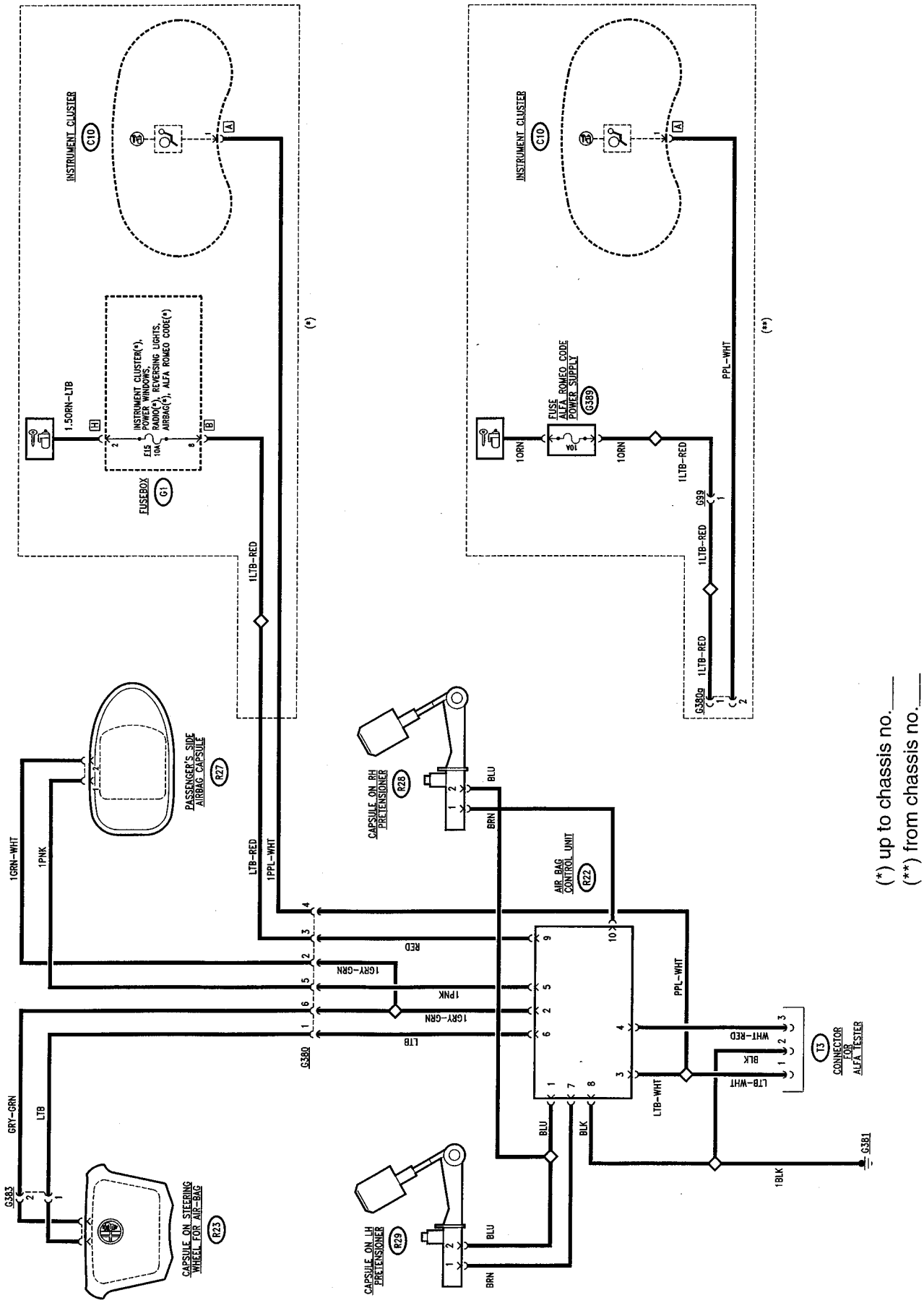

(*) up to chassis no.____
(**) from chassis no.____

WIRING DIAGRAM (TRW control unit - from chassis no.6016879)

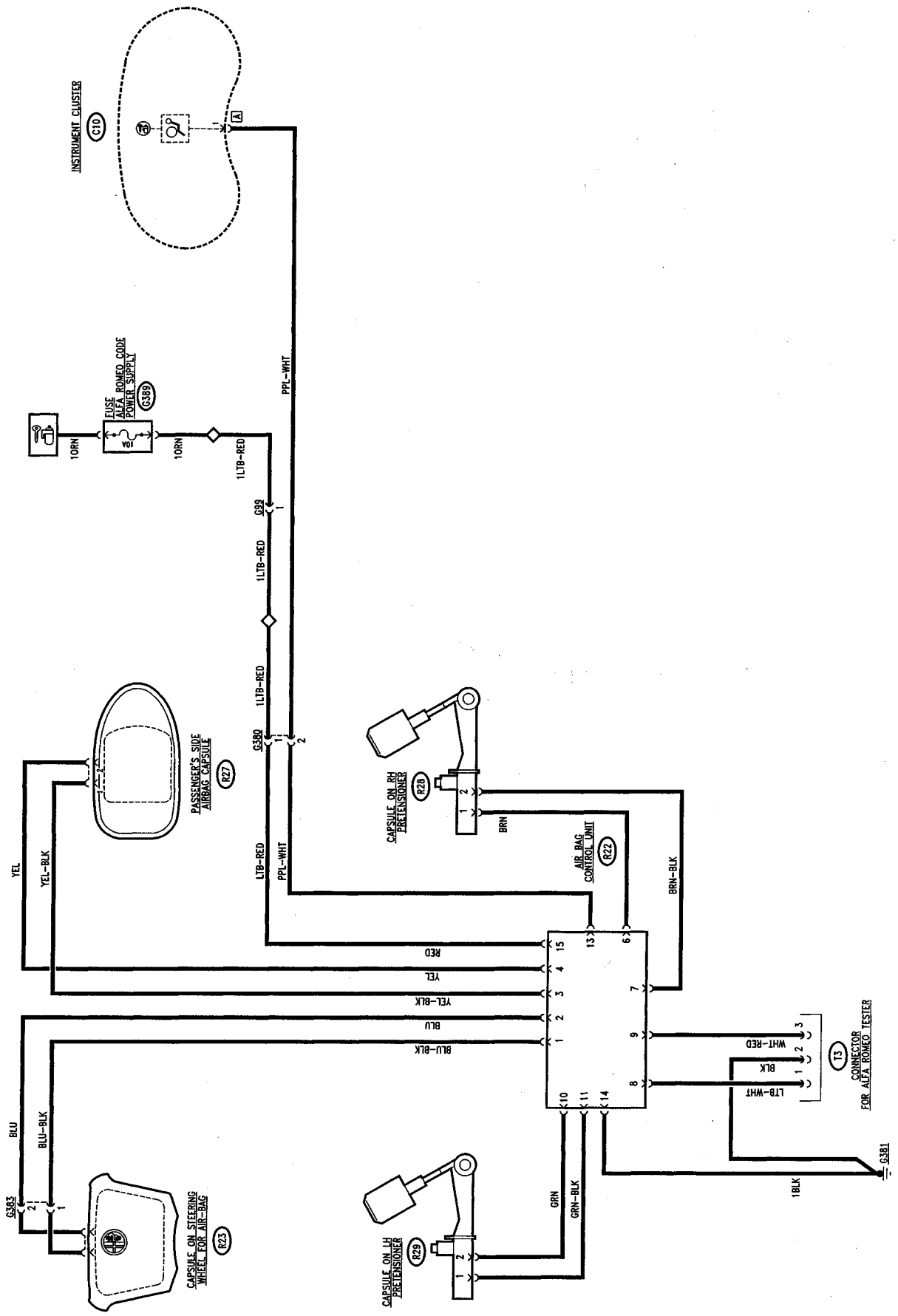

FUNCTIONAL DESCRIPTION (BECKER control unit - up to chassis no.6016878)

The control unit **R22** is supplied at pin 9 by the "key-operated" supply, - up to chassis no.___ - with a circuit protected by fuse **F15** located in fusebox **G1** and from chassis no.___ via wander fuse **G389** (10A).

The system comprises two cushions, one in front of the driver **R23** (at the centre of the steering wheel) and one in the dashboard in front of the passenger **R27** and the two pretensioner modules **R28** and **R29** respectively located on the passenger seat and the driver seat.
While the car travels, the control unit **R22** continuously diagnoses the system, thereby checking the continuity of the circuits and of the components.

In the event of a crash detected by the two internal sensors (one piezoelectric and one mechanical) the control unit commands the triggering of the two modules sending a voltage via two signals: one earth (from pin 5 for the passenger's module and from pin 6 for the module on the steering wheel) and a 12 V supply (pin 2).

When a fault or system malfunction is detected, the type of fault is logged and the warning light on the instrument panel **C10** is turned on to alert the driver of the presence of a fault in the system.

Lastly, connector **T3** allows connection with the ALFA TESTER.

FUNCTIONAL DESCRIPTION (TRW control unit - from chassis no.6016879)

The control unit **R22** receives the "key-operated" supply at pin 15, with the circuit protected by wander fuse **G389** (10A), while pin 14 is connected to earth on the specific point **G381** connected near the control unit.

The system comprises two cushions, one for the driver **R23** (at the centre of the steering wheel) and one in the dashboard in front of the passenger **R27** and the two pretensioner modules **R28** and **R29** located on the passenger's and driver's seats respectively.

While the car is travelling, the control unit **R22** continuously diagnoses the system checking the continuity of the circuts and components.

If a crash is detected by the two internal sensors (one piezoelectrical and one mechanical), the control unit commands activation of the two modules sending a current via two signals from pin 3 and 4 for the passenger's module and from pin 1 and 2 for the module on the steering wheel.

In the same way, for the pretensioners, two signals are sent from pin 6 and 7 for the passenger's side and from pin 10 and 11 for the driver's side.

When a system fault or malfunction is detected, the type of fault is memorised and the Air Bag warning light on the instrument cluster **C10** is turned on to alert the driver of the presence of a system fault.

Lastly, connector **T3** allows connection to the ALFA TESTER via pin 8 (line L) and 9 (line K).